75 YEARS

LESSMANN

THE GERMAN BRUSH COMPANY

2023

en

CATALOGUE

QUALITY MADE IN GERMANY

Table of contents

4–7 Information

8–13 Technology, Material and Safety

14–43 **01 WHEEL BRUSHES**
Knot Wheel Brushes, Joint Cleaning Brushes, Pipeline Brushes, Cutback Brushes, Single Segment Brushes, Wheel Brushes, Brushes for the wood machining industry, Special Models, Accessories

44–53 **02 DEBURRING BRUSHES**
Deburring Brushes, Roller Brushes, Deburring End Brushes

54–69 **03 CUP AND BEVEL BRUSHES**
Cup Brushes, Bevel Brushes, Brushes for grass trimmers, X-LOCK brush assortment, Low sparking brushes

70–87 **04 SHANK BRUSHES**
Wheel Brushes with Shank, Cup Shank Brushes, End Brushes, Miniature Brushes

88–107 **05 HAND BRUSHES AND BROOMS**
Hand Brushes Standard, Special Hand Brushes, Spark Plug Brushes, Fine Scratch Brushes, Barbecue Grill Brushes, Special Models, Brooms and Scrubs, Dusters, Weed Brushes and Weed Brooms

108–129 **06 INTERIOR BRUSHES**
Mikro Interior Brushes, Interior Brushes, Cylinder Brushes, Hole Cleaning Brushes, Bore Hole Cleaning Brushes, Tube and Sleeve Brushes, Boiler Brushes, Stove Pipe Brushes, Accessories, Fitting Brushes, Brushes and Scratchers

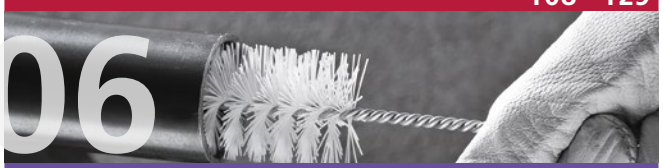

130–139 **07 DIY BRUSHES AND SALES PROMOTION**
Do It Yourself Brushes, Packaging and Presentation, Sales Promotion

140–155 **08 INDUSTRIAL BRUSHES**
Brushes with carbon fibre, High Performance Filament Brushes, Staple Set Brushes, Disc Brushes, Lath Brushes, Wheel Brushes and Wide Face Brushes, Strip Brushes

156–172 **09 STRIP BRUSHES**
Sealing brushes straight & angled fittings, Strip brushes for slots / profiles, Strip brushes in aluminum profile, Shaped strip brushes, filling facing outwards or inwards, Cup shaped strip brushes

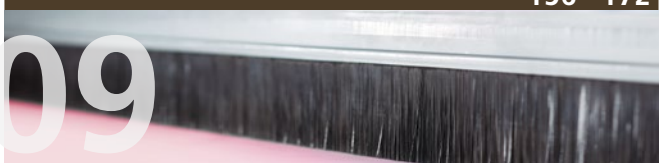

180–183 Article Numbers

184 Keyword Index

LESSMANN®
THE GERMAN BRUSH COMPANY

Dear customers,

2022 was a particularly challenging year for all of us. Never before have we had to deal with so many different hurdles at the same time, and rarely have forecasts been so difficult. We often felt overwhelmed by the changes and quick solutions were required, but not at hand.

The Lessmann company values are **quality, fairness, reliability, sustainability and independence**. These values have been our guide in uncertain times and led us successfully through previous difficulties. We continue to uphold them, and they will guide our actions in the future. For the benefit of our employees, customers, suppliers and society.

In 2023 we proudly look back on the **75 years** in which we have always been guided by these beliefs. In 1948 Johann Lessmann and his children Edgar and Traudel founded a small brush factory in Oettingen. Today as a third-generation family run business, we are facing new customer demands and market stature. As a result Lessmann is looking to the future by adding new products and extending current ranges. This year we have added cup, bevel and wheel brushes with the Bosch **X-LOCK** mounting system on pages 66 and 67 to our extensive catalog range. On page 19 you will find our **joint cleaning brushes with STM filament** now also available with 20-millimeter bore. Our **knotted shank brushes with 0.15 mm steel wire** have also been added to the standard range in diameters of 19 and 29 millimeters on page 85.

Enjoy reading the catalogue,

Jürgen Lessmann & Dieter Lessmann

75 YEARS

1955 1981 1993 2017

1948 1974 1990 2009 2023

J. Lessmann & Sohn
DRAHTBORSTENFABRIK · OETTINGEN · BAYERN
US-ZONE · ALLEMAGNE

LESSMANN®
THE GERMAN BRUSH COMPANY

Five Good reasons to choose Lessmann

We focus on products of the highest quality and place great emphasis on our service and consulting to make it easier for you to work.

We see our customers and suppliers as true partners. This fairness is the great strength of our family-run company.

You can rely on us for consistent quality and adherence to delivery dates. For us, reliability also means producing both mass-produced items and custom-made products at competitive prices.

Sustainable entrepreneurial action with responsibility for society, the environment and future generations is an important principle for us.

We strive for independence on the procurement and sales side. Together with the distribution of know-how across all levels, this gives you the security of having a strong partner with us long term.

In addition to our focus on these values, another factor is absolutely essential to our success:

One of the most important strengths are our **250 qualified and motivated employees**, who are willing to get into new challenges, react flexible and to bring in their knowledge und competence. That's how we work together to have a mutual success.

We would like to take this opportunity to express our sincere thanks to all our employees who have accompanied and supported us, laughed with us and argued with us during the 75 years of our company's existence. You are all the basis of our company.

Thank you!

YEARS

Future-oriented investment

After the enlargement of our production hall by 4,200 sqm in 2014 and of our high rack storage area by 1,300 sqm in 2016, we have completed construction of the new administration building in 2021, providing our employees with modern offices equipped to a high technical standard – with more space, more light and a better indoor climate. In addition, we constantly modernized and enhanced our production lines with new machines.

These steps are a visible sign of our stable growth. Besides the new building shows our intention to assure our position as leading technological and qualitative company and to strengthen it by opening new markets! Furthermore we have more space and capacities for producing more industrial special solutions – of course in our usual best quality and accuracy!

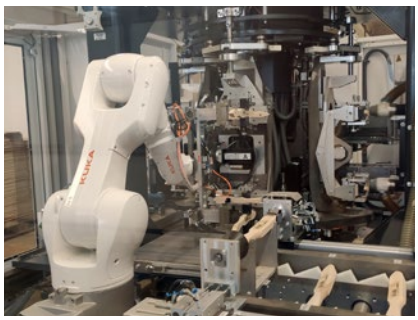

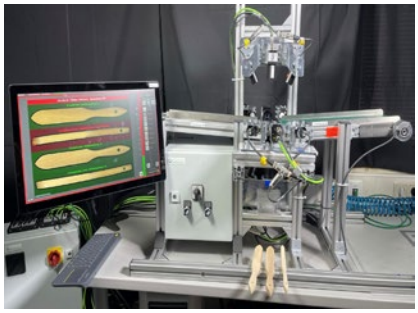

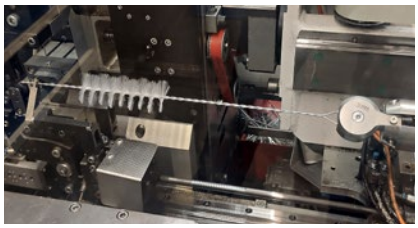

Made in Germany

Quality made in Germany. For LESSMANN that does not only mean, that all our products are manufactured in Bavaria, but also the huge part of all raw materials as filament, wood, metal or plastics are purchased from renowned suppliers in Germany.

We manufacture almost all products in a broad standard program on our own. That's why already the quality of the raw materials has a significant role. Intensive test of the materials and inspections during production, build up two important values of the reliable LESSMANN-quality.

The headquarters in Germany requesting us to be the pioneer when using modern technology and automation. Thus our customers can receive the best quality at competitive prices.

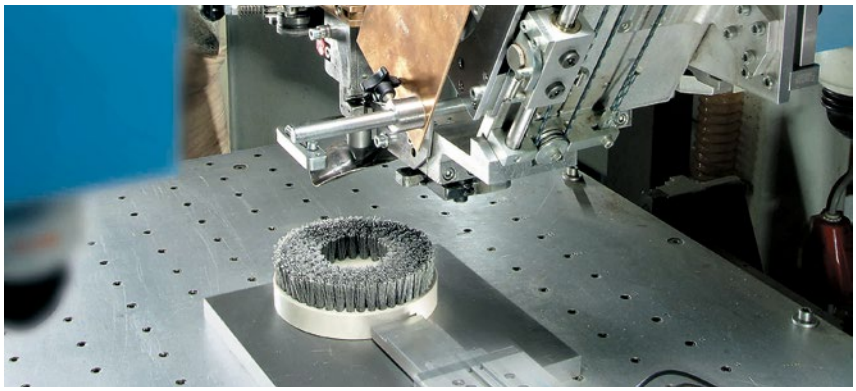

Fit for the Globe

First-class quality products, expertise and a high flexibility – our innovative technical brushes are "Fit for the Globe".

As an Authorised Economic Operator (AEO) with the combined authorization „customs simplification (AEOC) & security and safety (AEOS)" we can offer you much faster and easier customs clearance for export.

Depending on the country we work with our own employees, regional importers or authorised retailers. Our export department has the accurate know-how, to consult and satisfy the demand of our customers globally.

In 2016 we launched a foreign branch in the USA. The „Lessmann Inc." guarantees optimal service and logistics and our approved first-class products on the American market.

Perfect Presentation

The brand LESSMANN signifies quality and gives clearly structured information.

Please have a look at our home page in the internet!
On www.lessmann.com you will find our latest catalogue as well as leaflets to download.

Further technical advice as well as operating instructions are available.

Self-service Tool Bar Displays
Take advantage of our experience and use this idea that will lead to successful and increased sales.

Systematic Sustainability

Ecological responsibility means operational environmental protection as well as a contribution to climate protection for Lessmann. Therefore, our goal was to have the company certified according to ISO 14001:2015 (environmental management) to clearly define and track reduction targets for emissions and raw material consumption. Lessmann has been certified according to this standard since May 2022 and thus records consumption to make future reduction targets measurable.

Since 2003, we have been using several photovoltaic systems to generate electricity on all our company's roof surfaces. Through constant extensions, we have now reached a total output of 588 kWp. With an annual consumption of approx. 1,200 kWh, we now generate almost 50 % of our electricity ourselves.
We are even better with the heating: This is fueled to 100 % from leftovers of the production of our wooden handles.

PEFC Certification System

PEFC is a transparent and independent certification system to ensure sustainable forest management. An inspection is carried out by independent experts and ensures compliance with the standards.
Lessmann uses PEFC certified wood that comes from a regional forest and is managed sustainable or complies with PEFC standards, e.g. in hand brushes.

PEFC™
PEFC/04-31-0389

Promoting sustainable forest management

www.pefc.de

Individual Solutions for special applications

Often technical brushes for very special applications are requested. Devarnishing surfaces or rounding burrs. Each application is different and a standard tool could not be used in each case.

Every day we develop new brushes for industrial demands. In the majority of the cases, the aim of the operator is to increase productivity. Our experienced consultants will help you to make the right choice and to find the appropriate design of the brushes for your individual needs.

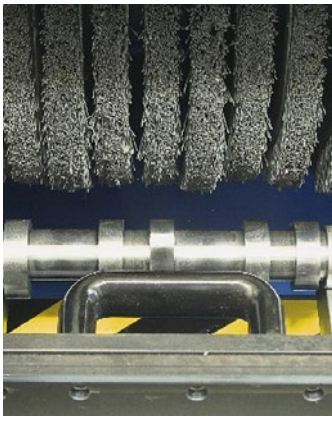

"Simply the Best" by testing

Quality is our feature!

Accredited with
DIN EN ISO 9001:2015

Our own production of nearly all components of our standard programme and our own development of special articles enables us to have an excellent knowledge in both manufacturing quality and safety testing.

Creating Innovation,
Exceeding Safety Standards,
Keeping Top Quality

With this motivation we make complex development and product tests as an essential part of our work.

Material Tests
These are the first steps of our quality management: All deliveries of raw material are tested according to and above specification details. All wires are tested for their tensile strength and for their reverse bending strength by a fatigue measuring process.
Beside the quality of the material it is important that its attributes are as suitable as possible for their intended use.

Imbalance Test
An imbalance of machine driven brushes is not pleasant and is dangerous for the health of persons working at the machine.
Although it is not necessary under the DIN or the EN Norms, we produce our brushes according to our own standards for minimum imbalance. By doing so our customers take advantage of smooth running fatigue reducing brushes. Our employees in production ensure that these high quality aspects are maintained.

Safety Tests
According to European safety norms all brushes have to with-stand 1.5 times of the mentioned maximum RPM. Naturally when developing a brush, we test every brush type for this safety aspect. Only if all tests are satisfactory, can the article be produced. During production many samples are taken of the brushes in order to check the required safety speed. Should a model or a raw material be changed we begin the tests again. For this very reason every customer can rely on a high quality and safe tool.

Lifetime and Power
For the measurement of the lifetime and power of technical brushes there are neither norms nor standard procedures. After long developing processes and many tests we have found testing methods that simulate testing in real working conditions. On self built machines we are able to test the abrasion and thus the lifetime and power of machine driven brushes.
Beside the quality aspect these tests are helpful in optimising materials used, as well as component parts and the construction of brushes. Even if in comparison tests with competitor brushes such testing has shown and proved the high quality of our products:

We keep on testing to guarantee customer satisfaction.

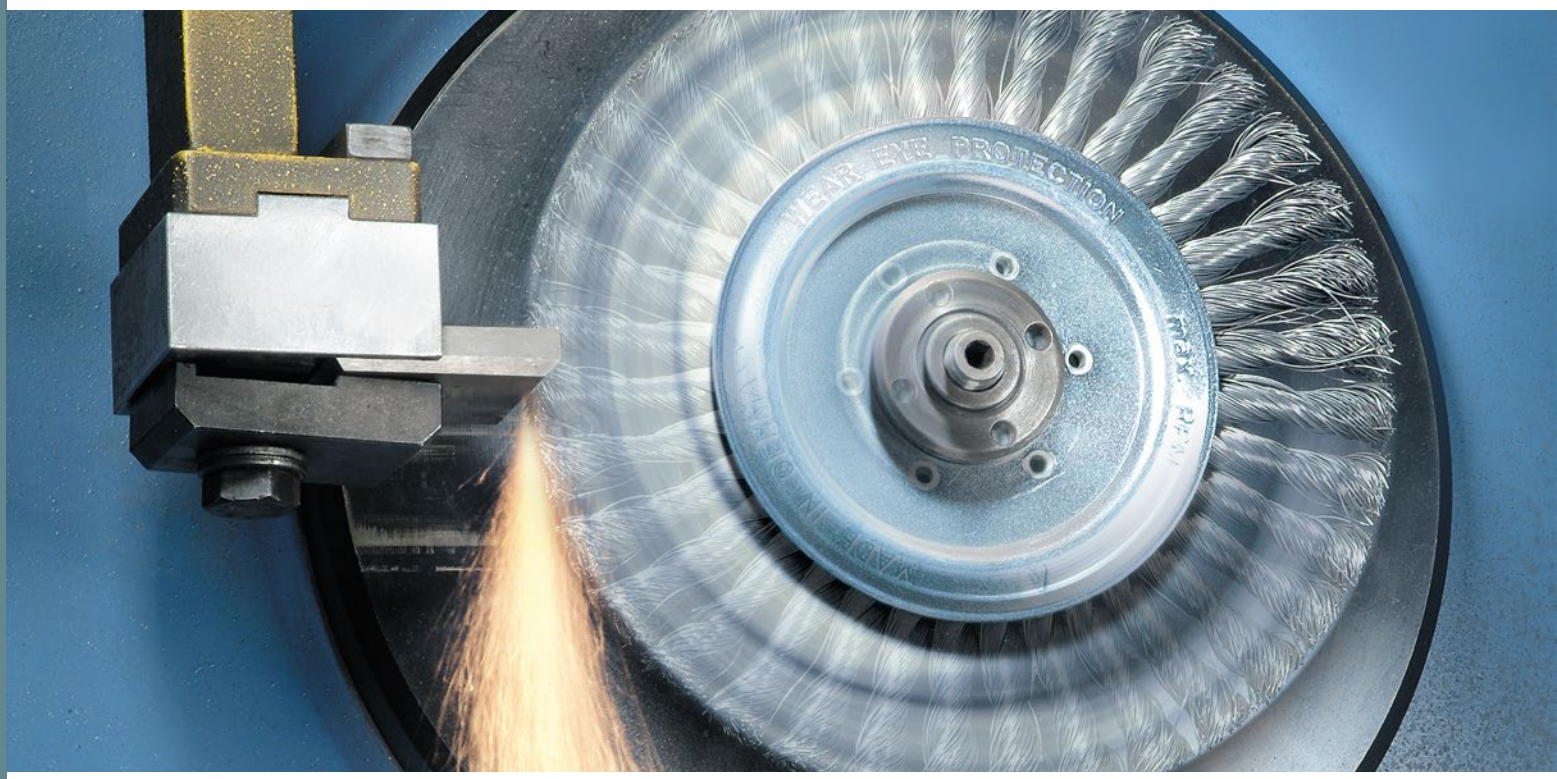

Recommendations for safe brush use

LESSMANN Quality is Safe
We guarantee the best quality and long lifetime for our products.
Our brushes are manufactured according to the existing standard EN 1083-2 and ANSI 165.1. All the relevant machine driven brushes are checked for occupational safety using a centrifugal force test.

Safety Information
All machine driven brushes require as with other rotary tools, that the required safety precautions are kept:

Safety for Your Body
All operators and other personnel in areas where rotary brushes are being used must wear safety goggles or face shields and protective clothing.

For your own safety:
Wear personal protective equipment

Brush Check
The brushes should be checked for damage before using.

A correct mounting is imperative.

Peripheral Speed
The max. RPM indicated in the catalogue are safety figures by which the brushes can be used without danger. Please do not exceed these figures under any circumstances! In most cases a lower RPM is sufficient to gain an optimal result.

Correct Pressure
The schedule shows the necessary motor drive power for different brush diameters. The brushes need only a light pressure while brushing because only the wire points are effective (please look at the schedule). A higher pressure does not improve the brushing effect. In fact the brush lifetime is reduced and greater power is needed.

Working with Shank Brushes
When working with shank brushes please note that the shank has to be inserted fully into the tool.
This is especially necessary when working with high RPM, for example on straight grinders and pneumatic tools.

Mechanical Application of interior brushes
Only use the brush with the indicated maximal peripheral speed (RPM max.). The max. RPM only is allowed when the brush is clamped min. for 10 mm into the tool. When the brush is inserted into the suitable work piece, higher RPMs are possible. **Only use the brush right rotating.**

Correct pressure

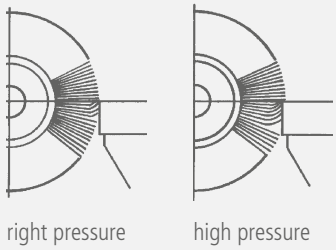

Machine usage:
These symbols in the chapters show on which machines the brushes usually are used.

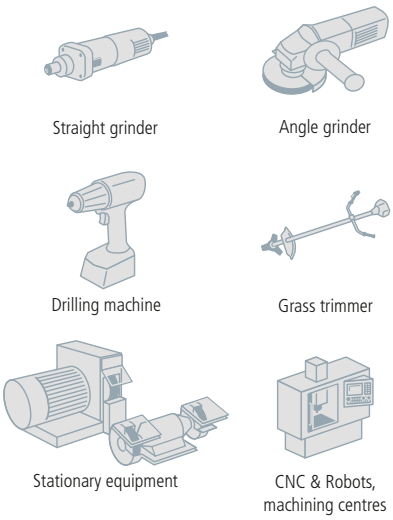

Power requirements for Wheel Brushes

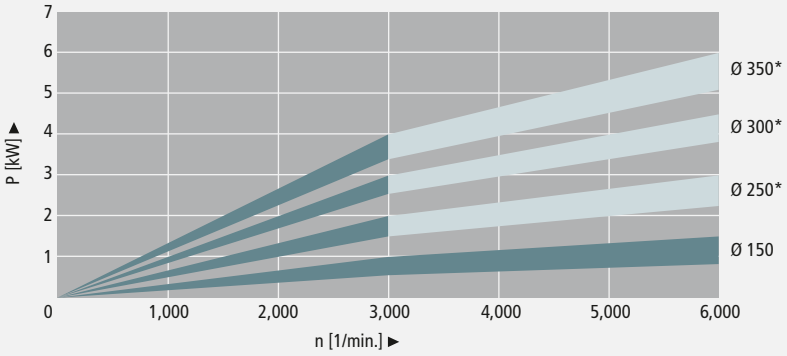

The performance figures mentioned above are only guidelines. *Power requirements for a brush width of 30 mm

minimum bore size for wheel brushes according to DIN EN 1083

Diameter of the brush in mm	Minimum diameter of bore in mm
50	4.6
75	6.5
100	10
150	13
200	16
250	20
300	20
350	32

Recommended use of brushes on angle grinders – the right combination

Common idle speed of angle grinders (WS)	Brush diameter	60	65	75	80	90	100	115	125	150	178	200
	Knot Wheel Brush						WS 1	WS 1	WS 2	WS 3	WS 4	WS 5
Ø 115 11,000 RPM = WS 1	Cup Brush, Crimped Wire	WS 2		WS 2	WS 3		WS 3		WS 5	WS 5		
Ø 125 11,000 RPM = WS 2	Knot Cup Brush without Bridle		WS 1	WS 2	WS 2	WS 2	WS 3/4		WS 5			
Ø 150 9,000 RPM = WS 3	Knot Cup Brush with Bridle				WS 3/4		WS 3/4		WS 5			
Ø 180 8,500 RPM = WS 4	Knot Bevel Brush						WS 1					
Ø 230 6,500 RPM = WS 5	Knot Bevel Brush						WS 1	WS 1				

Warning: Before each operation please compare the idle speed of the angle grinder with the max. peripheral speed of the brush!

Producing Quality – brushing the correct way

Optimise Brush Results
The brush diameter and filling length are most important for the perfect brushing result. It is therefore very easy to eliminate almost all bad brushing results:

Brushing effect too weak:
- Increase the peripheral speed by increasing the brush diameter or the operating speed, but never exceed the maximum RPM rating.
- Use a brush with shorter trim length.
- Use a brush with larger wire diameter.

Brushing effect too powerful:
- Reduce the peripheral speed by reducing the brush diameter or the operating speed.
- Use a brush with longer trim length.
- Use a brush with smaller wire diameter.

Brush transfers burr:
- Use a brush with shorter trim length.
- Examine brush and work piece position.
- Use a brush with wider face.
- Use a brush with thicker wire diameter.

Information for brushing on stainless steel materials you find at **www.lessmann.com/downloads**

Note: you are welcome to contact our technical contact persons.

Recommended Peripheral Speed for Brushing Application

	Peripheral Speed in m/s							
Application	15	20	25	30	35	40	45	50
With Filaments								
Removing Burrs				25–35				
Cleaning Welds						35–45		
Removing Scale						35–45		
Polishing					30–40			
Working on Plastic	15–20							
With Abrasive Filaments								
Dry conditions	16–18							
Wet conditions			25–30					

Conversion mm in Inches and I.S.W.G.

Brush diameter	
Millimeter	Inches
25	1"
50	2"
75	3"
100	4"
125	5"
150	6"
180	7"
200	8"
250	10"
300	12"
350	14"

Wire diameter		
Millimeter	Inches	I.S.W.G
0.08	0.0031	44
0.10	0.0039	42
0.12	0.0047	40
0.15	0.0059	38
0.20	0.0079	36
0.25	0.0098	33
0.30	0.0118	31
0.35	0.0138	29
0.40	0.0157	27
0.50	0.0197	25
0.80	0.0315	21

Peripheral Speed v in m/sec. (please follow the max. rotary speed of the brush!)

n [1/min.] (RPM)	Brush diameter d in mm/inches							
	50 2"	80 3"	100 4"	125 5"	150 6"	200 8"	250 10"	300 12"
1,000		4.2	5.2	6.5	7.9	10.5	13.1	15.7
1,500	3.9	6.3	7.9	9.8	11.8	15.7	19.6	23.6
2,000	5.2	8.4	10.5	13.1	15.7	20.9	26.2	31.4
2,500	6.5	10.5	13.1	16.4	19.6	26.2	32.7	39.3
3,000	7.9	12.6	15.7	19.6	23.6	31.4	39.3	47.1
3,500	9.2	14.7	18.3	22.9	27.5	36.7	45.8	55.0
4,000	10.5	16.8	20.9	26.2	31.4	41.9	52.4	62.8
5,000	13.1	20.9	26.2	32.7	39.3	52.4	65.4	78.5
6,000	15.7	25.1	31.4	39.3	47.1	62.8	78.5	
8,000	20.9	33.5	41.9	52.4	62.8	83.8		
10,000	26.2	41.9	52.4	65.4	78.5			
12,500	32.7	52.4	65.4	81.8				
15,000	39.3	62.8	78.5					
20,000	52.4	83.8						
25,000	65.4							

$$\text{Peripheral Speed} \quad v = \frac{\text{Brush diameter (d)} \times \pi \times \text{Peripheral Speed (n)}}{1{,}000 \times 60}$$

For **working in wet condition** we recommend **PA 6.12** as base. Please state on your order! Since the upcoming heat on wet applications is conducted, the peripheral speed can be set much higher than on dry applications.

Brush filling materials and their characteristics

STA Steel Wire straight / crimped
is developed in co-operation with wire producers, so that it meets our special requirements. This wire is alloyed with manganese in order to increase its toughness. Result is higher tensile strength and longer lifetime of LESSMANN-Brushes.

STH Steel Wire High Tensile straight / crimped
is most often used in Knotted Brushes, Deburring Brushes and Pipeline Brushes. Furthermore we offer this high tensile wire in our complete assortment. Above all it features through its tensile strength and high fatigue rates, what results in lifetime even for extreme brushing applications.

STM Brass Coated Steel Wire
For long lifetime plus high tensile strength and cutting performance. Best results in brushing and deburring applications.

STL Cord Wire
Brass coated steel wire corded. Longest lifetime for heavy duty brush applications e. g. deburring.

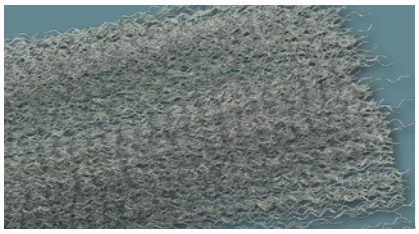

ROF / RO4 / ROL / RO8 Stainless Steel Wire

ROF must be used when working on stainless steel. Material number (WNr.) **1.4301 (AISI 304)**. This wire is resistant against corrosion and certain acids and bleaches.
RO4 Premium-quality stainless steel wire. WNr. **1.4401 (AISI 316)**
RO8 High heat resistant stainless steel wire. WNr. **1.4860.**
ROL Stainless Steel Wire with cord construction WNr. **1.4301/1.4310**

ROH Stainless Steel Wire High Tensile
This wire is characterized by a high tensile strength (2100 – 2500 N/mm) and a long lifetime even in extreme applications. WNr. **1.4310 (AISI 301)**

Further information on brushing on stainless steel materials you find at **www.lessmann.com**

MES Brass Wire (CuZn)
is softer than steel wire. Among other applications brass wire is suitable for working with mild bleaches. It's mainly used for processing of nonferrous metals.

Straight / Crimped / Knotted:
Metal wires for brushes can be processed in brushes straight, crimped or knotted. Wire knots are always made with straight wires. Compared to a straight wire with the same diameter the wire knots are much stronger than the single wire. Crimped wires brace each other and therefore achieve a better stability in the brushes.

Brush filling materials and the characteristics

BRO Bronze Wire (CuSn)
is used for surface processing of wood and metal. It's also used when low-sparking brushes are needed.

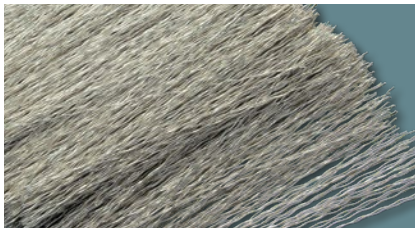

NSI Nickel Silver (CuNiZn)
is used for polishing work pieces e.g. parts of nickel silver or brass, as it is softer than steel wire.

PP, PA, PE, PBT Synthetic Filaments
are resistant to abrasion and flexible. Despite minor resistance against heat these filaments are perfect for cleaning, grinding or surface processing of metal, plastic or wood.
Available are:
- Polypropylen (PP, white by default)
- Polyamid (PA, transparent by default) – PA 6, PA 6.6, PA 6.12
- Polyethylen (PE)
- Polyester (PBT); only for cleaning

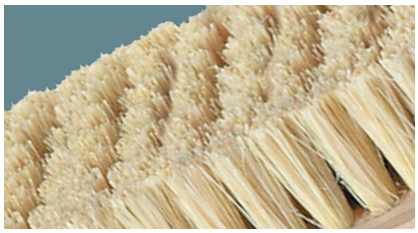

FIB Fibre
consists of heat resistant plant fibre, is slightly abrasive and therefore can be used for smooth grinding, above all for working on wooden surfaces. Moreover fibre is used for general cleaning and polishing work.

ROS Horse Hair
is an animal hair, which above all is deployed in terms of light cleaning and dusting work. Horse hair is resistant against diluted acids and bleaches. It's not chargeable for static electricity.

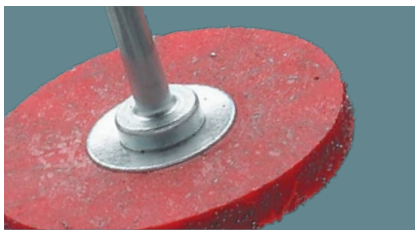

Encapsulated Brushes
Encapsulated brushes are ideal for an aggressive work on working pieces and for a very exact working in edges and angles.
By embedding steel wire, stainless steel wire, brass coated wire or brass wire in tough plastic, the filling width always remains the same and early break of the wires can be prevented. It's the perfect tool for long lasting and safe working. The advantages when working with encapsulated brushes are longer lifetime and harder brush effect.
Furthermore the risk of injury declines when using encapsulated brushes.
However, it might be possible that the brush will leave marks on the work piece.

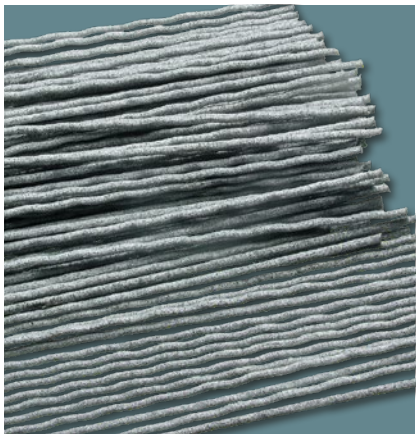

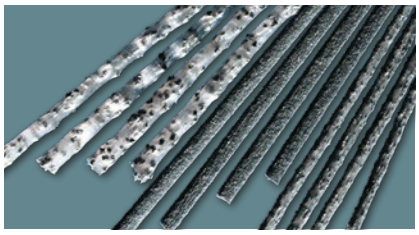

3 grits in silicon carbid

Abrasive Filaments
consist of polyamide bristles containing abrasive grits. This modern material is ideal for deburring work, fine surface finishing of plastic and metal parts as well as grinding, cleaning, polishing, and structuring of surfaces. With their flexible surface, brushes with abrasive filament align to the different shape of working pieces. Abrasive bristles also have grinding effects on the side, which makes them even more flexible to application possibilities. You can choose between grit (from K60 to K1000) composed of aluminium oxide (AO) and silicon carbide (SIC). Also diamond filament is available.

Normally 2 polyamide-types are used:
Polyamide PA 6:
- good bend recovery
- good abrasion resistance
- absorption of water to max. 10%

Polyamide PA 6.12 (ideal when working in wet surrounding):
- flexible and excellent bend recovery
- high abrasion resistance
- absorption of water to max. 3%

You can differ the bristles between round or flat bristles. Usually round bristles are used, because they are more flexible than flat bristles and very good for processing work pieces with strong shapes. Round bristles with a smaller diameter, less than 150 mm, are very efficient if you are not able to use flat material.
However, flat bristles possess a high abrasive grit, represent a long durability and a high removal rate by a larger contact surface.

Grits to choose from:

Abrasive filaments SIC (filament K60 to K1000):
- intensive results when deburring
- for surficial improvement/-processing
- mainly for process stainless steel and aluminium limited
- microhardness: 25.000 N/mm²

Common measurements: K 80/1,1, K 80/1,2, K 80/1,4, K 120/0,6, K 120/1,1, K 180/0,9, K 180/1,0, K 320/0,60, K 500/0,5

Abrasive filaments AO (filament K60 to K1000):
- less sharp-edged compared to SIC
- to the finish of soft metal
- to polishing and smoothing
- to process aluminium when smoothing or polishing
- microhardness: 21.000 N/mm²

Common measurements: K 80/1,2, K 120/1,1, K 180/0,9, K 180/1,0, K 240/0,75, K 240/0,90, K 320/0,60, K 500/0,25, K 500/0,50, K 600/0,3 – others on request.

Diamonds filaments(filament K60 to K1000):
- for aggressive applications
- used for materials with high material strength
- self-renewing through independent sharpening
- microhardness: 42.000 N/mm²

Ceramic grit:
- very good grinding and polishing properties
- maximum lifetime and aggressiveness
- working with hard metal tools
- microhardness: 42.000 N/mm²

All information on **chemical properties** can be found at www.lessmann.com/index.php/en/content/view/full/282 in the area of Brush Know-How.

Physical Characteristics

	STA	STH	ROF	ROH	RO4	RO8	STM / STL	MES
WNr.			1.4301	1.4310	1.4401	1.4860		CuZn36 / CuZn37
AISI			304	301	316			
Tensile Strength in N/mm²*	1,800 – 2,100	2,300 – 2,500	1,800 – 2,100	2,100 – 2,500	1,600 – 1,800	1,600 – 1,800	2,300 – 2,600	900 – 1,200
Specific Gravity in g/cm³	7.85	7.85	7.85	7.85	7.85	7.90	7.85	8.50
Temperature Consistancy in °C	+ 300 °C	+ 300 °C	+ 450 °C	+ 450 °C	+ 500 °C	+ 600 °C	+ 300 °C	+ 180 °C

*The specified Tensile Strength is applicable for a wire strength 0.3 – 0.4 mm

LESSMANN®

THE GERMAN BRUSH COMPANY

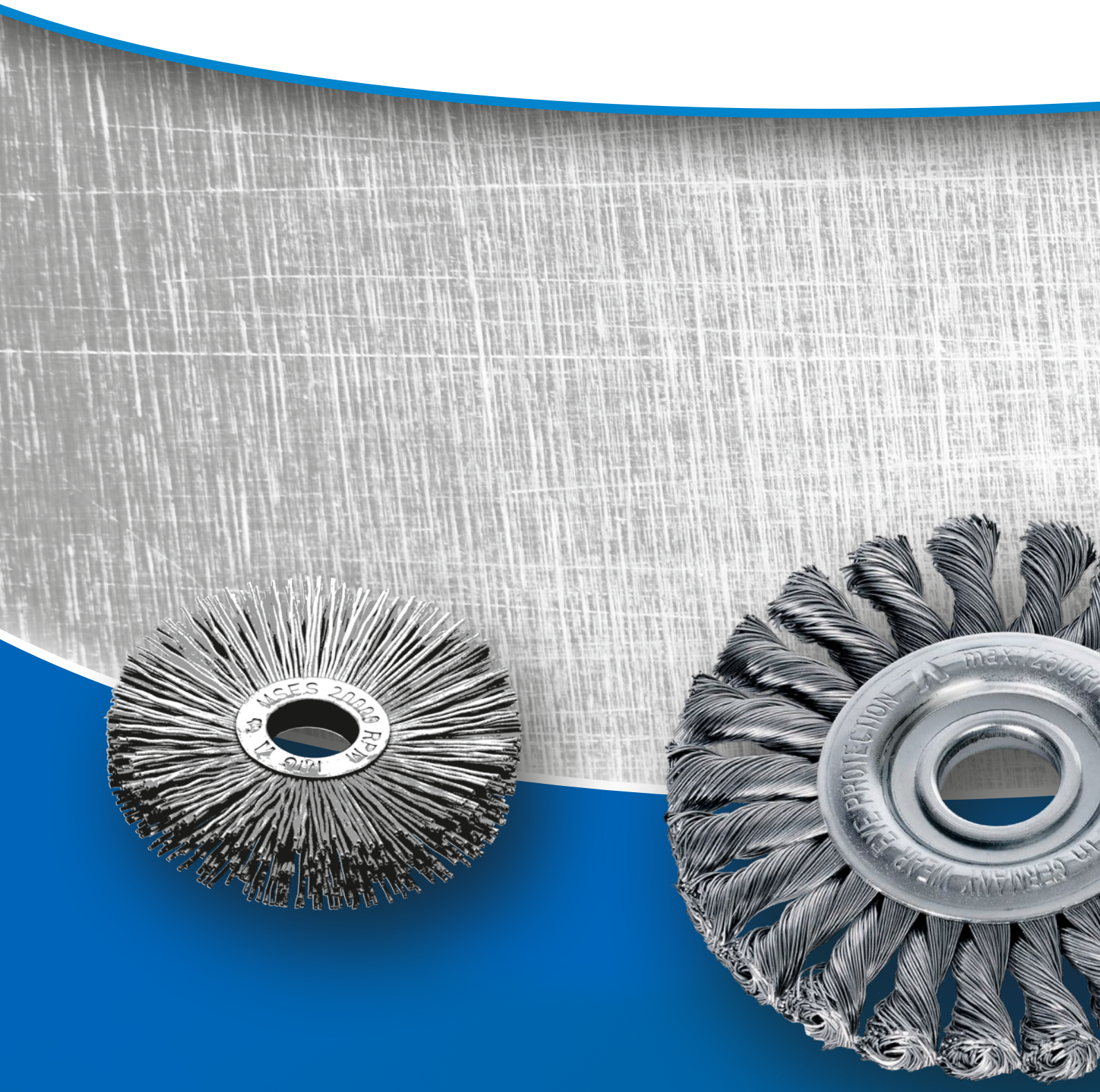

WHEEL BRUSHES 01

Knot Wheel Brushes

Knot Wheel Brushes
Knot wheel brushes for grinders, angle grinders and stationary machines used in the preparation and reworking of bolt fillet and butt welds. They remove scale, rust, paint, slag, rubber residue and can be used for deburring.

Knot Wheel Brushes with multiple Rows
Ready mounted brushes with multiple rows have a dense filling compared to single segment brushes, which are assembled together. In your order please state the width of the brush, bore size and type and thickness of wire.

The listed knot wheel brushes are for the use in stationary machines.

Stainless Steel Brushes
LESSMANN-brushes with stainless steel have green side plates. We use wire with material number 1.4310. Material number 1.4401 can be used on request.
Information on working on stainless steel you find at www.lessmann.com

All knots on our standard twisted wire wheel brushes are left hand twisted in order to minimize the undoing of the knots should the brush be used incorrectly.
On request we can supply right hand twist brushes.

In addition to brushes with left or right knotted, we also offer left-right knotted brushes.

Left-right knotted wheel brushes usually are more aggressive, hence they are often used for heavy brushing operations.
Besides the knots open less, therefore there are ideal for the treatment of edges.

User Tip:
We recommend to turn the brush during use in order to maintain sharpened wire ends.

On request other bores and wire diameter are available.

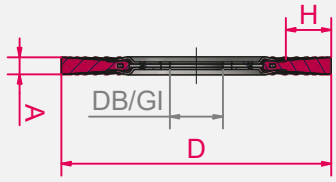

ZF = Knot type
Z = number of knots, **R** = number of rows

Item Nos. in bold are available ex stock.
Consider our minimum order value for *italic printed* article numbers (see page 178).

STM	= brass coated steel, straight
STH	= steel wire, high tensile, straight
ROH	= stainless steel wire, high tensile, straight

X-Lock Mount
Our wheel brushes with X-Lock-mount can be found on page 66.

You can find our **tutorials** here:
www.lessmann.com/index.php/en/content/view/full/711

You can find our **Enquiry Forms** in the respective category under:
www.lessmann.com/index.php/en/content/view/full/61 or in the catalog from page 173

Chunky packaging
Many articles you receive as standard in handy covering boxes with 10 pcs.

Knot types ZF

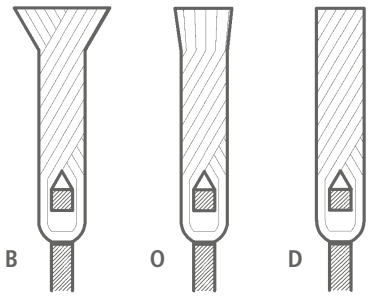

B: Rose Bud
O: Open Knot (wire ends are cut)
D: Fully knotted (wire ends are cut completely)

Attention!
Starting in summer 2023, we will gradually convert all threads to star shape.

Knot Wheel Brushes, Steel Wire, Brass Wire

D mm | *inch*	A mm | *inch*	DB/GI mm | *inch*	H	Z	ZF	R	RPM max.	Pack.	**STH 0.35** | *0.014"* Art.-No.	**STH 0.50** | *0.020"* Art.-No.	**STH 0.80** | *0.031"* Art.-No.	**STM 0,50** | *0.020"* Art.-No.	*left-right knotted* **STH 0.50** | *0.020"* Art.-No.
75 | *3*	10 | *3/8*	13 | *1/2*	15	18	B	1	25,000	1	**470.111***	**470.211***			
100 | *4*	12 | *1/2*	M 14 x 2,0	22	18	B	1	12,500	1	**471.117***	**471.217***			
115 | *4 1/2*	14 | *1/2*	22.2 | *7/8*	24	20	B	1	12,500	1	**472.111***	**472.211***		**472.211.SM***	**472.211.WZ***
115 | *4 1/2*	14 | *1/2*	M 14 x 2,0	24	20	B	1	12,500	1	**472.117***	**472.217***			
125 | *5*	14 | *1/2*	22.2 | *7/8*	29	20	B	1	12,500	1	**473.111***	**473.211***		**473.211.SM***	**473.211.WZ***
125 | *5*	14 | *1/2*	M 14 x 2,0	29	20	B	1	12,500	1	**473.117***	**473.217***			**473.217.WZ***
125 | *5*	14 | *1/2*	22.2 | *7/8*	29	24	B	1	12,500	1		**473.211.24**			
150 | *6*	14 | *1/2*	22.2 | *7/8*	32	26	B	1	12,500	1	**474.111***	**474.211***	*474.311*		
150 | *6*	14 | *1/2*	M 14 x 2,0	32	26	B	1	12,500	1	*474.117**	**474.217***	*474.317*		
178 | *7*	14 | *1/2*	22.2 | *7/8*	38	32	B	1	12,500	1	**475.111***	**475.211***	**475.311**		
178 | *7*	14 | *1/2*	M 14 x 2,0	38	32	B	1	12,500	1	*475.117**	**475.217***	*475.317*		
200 | *8*	14 | *1/2*	22.2 | *7/8*	41	36	B	1	9,000	1	**476.111**	**476.211**	**476.311**		
200 | *8*	14 | *1/2*	50.8 | *2*	41	36	B	1	9,000	1		*476.210.51*	available on demand		
230 | *9 1/16*	14 | *1/2*	22.2 | *7/8*	56	40	B	1	9,000	1		*475.211*			
250 | *10*	15 | *5/8*	50.8 | *2***	42	52	O	1	5,000	1		**477.210.75**	*477.310.75*		
300 | *12*	15 | *5/8*	50.8 | *2***	56	58	O	1	5,000	1		*478.210.75*	*478.310.75*		

Knot Wheel Brushes, Stainless Steel Wire

D mm | *inch*	A mm | *inch*	d mm | *inch*	H	Z	ZF	R	RPM max.	Pack.	**ROH 0.35** | *0.014"* Art.-No.	**ROH 0.50** | *0.020"* Art.-No.	*left-right knotted* **ROH 0.50** | *0.020"* Art.-No.
100 | *4*	12 | *1/2*	M 14 x 2,0	22	18	B	1	12,500	1		**471.817***	
115 | *4 1/2*	14 | *1/2*	22.2 | *7/8*	24	20	B	1	12,500	1	**472.711***	**472.811***	**472.811.WZ***
115 | *4 1/2*	14 | *1/2*	M 14 x 2,0	24	20	B	1	12,500	1	**472.717***	**472.817***	
125 | *5*	14 | *1/2*	22.2 | *7/8*	29	20	B	1	12,500	1	**473.711***	**473.811***	**473.811.WZ***
125 | *5*	14 | *1/2*	M 14 x 2,0	29	20	B	1	12,500	1		**473.817***	
150 | *6*	14 | *1/2*	22.2 | *7/8*	32	26	B	1	12,500	1		**474.811***	
150 | *6*	14 | *1/2*	M 14 x 2,0	32	26	B	1	12,500	1		**474.817**	
178 | *7*	14 | *1/2*	22.2 | *7/8*	38	32	B	1	12,500	1		**475.811***	
178 | *7*	14 | *1/2*	M 14 x 2,0	38	32	B	1	12,500	1		**475.817**	

Thread 5/8" – 11 UNC on request | * packed 10 pieces per carton | ** with turtle bore

Knot Wheel Brushes, multiple rows

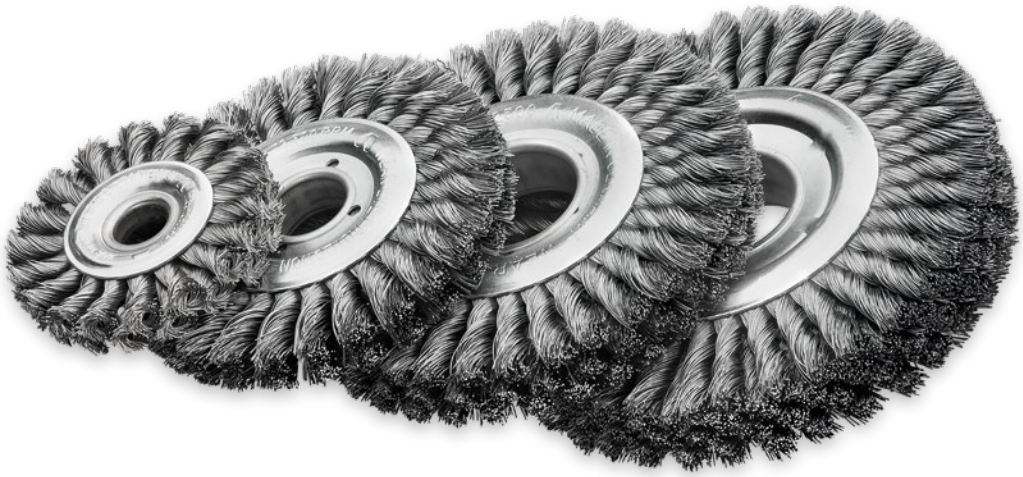

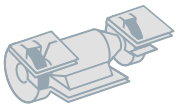

EAN

Knot Wheel Brushes, multiple rows

D mm | *inch*	A	EBR	$DB_{Stand.}$ mm | *inch*	DB_{min}	H	ZF	Z x R	RPM max.	Pack.	STH 0.35 *0.014"*	STH 0.50 *0.020"*	ROH 0.35 *0.014"*	ROH 0.50 *0.020"*
100 | *4*	22-24	12	20 | *3/4*	10	21	B	20 x 2	12,500	1	*471.12K*	*471.22K*	*471.72K*	*471.82K*
100 | *4*	30-32	18	20 | *3/4*	10	21	B	20 x 3	12,500	1	*471.13K*	*471.23K*	*471.73K*	*471.83K*
100 | *4*	34-36	25	20 | *3/4*	10	21	B	20 x 4	12,500	1	*471.14K*	*471.24K*	*471.74K*	*471.84K*
115 | *4 1/2*	22-24	18	30 | *1 1/4*	10	23.5	B	22 x 2	12,500	1	*472.12K*	*472.22K*	*472.72K*	*472.82K*
115 | *4 1/2*	30-32	25	30 | *1 1/4*	10	23.5	B	22 x 3	12,500	1	*472.13K*	*472.23K*	*472.73K*	*472.83K*
115 | *4 1/2*	34-36	30	30 | *1 1/4*	10	23.5	B	22 x 4	12,500	1	*472.14K*	*472.24K*	*472.74K*	*472.84K*
125 | *5*	22-24	18	30 | *1 1/4*	13	28.5	B	24 x 2	12,500	1	*473.12K*	*473.22K*	*473.72K*	*473.82K*
125 | *5*	30-32	25	30 | *1 1/4*	13	28.5	B	24 x 3	12,500	1	*473.13K*	*473.23K*	*473.73K*	*473.83K*
125 | *5*	34-36	30	30 | *1 1/4*	13	28.5	B	24 x 4	12,500	1	*473.14K*	*473.24K*	*473.74K*	*473.84K*
150 | *6*	22-24	18	30 | *1 1/4*	13	31.5	O	28 x 2	12,500	1	*474.12K*	*474.22K*	*474.72K*	*474.82K*
150 | *6*	30-32	25	30 | *1 1/4*	13	31.5	O	28 x 3	12,500	1	*474.13K*	*474.23K*	*474.73K*	*474.83K*
150 | *6*	36-38	30	30 | *1 1/4*	13	31.5	O	28 x 4	12,500	1	*474.14K*	*474.24K*	*474.74K*	*474.84K*
178 | *7*	22-24	18	50 | *2*	16	37.5	O	34 x 2	12,500	1	*475.12K*	*475.22K*	*475.72K*	*475.82K*
178 | *7*	30-32	25	50 | *2*	16	37.5	O	34 x 3	12,500	1	*475.13K*	*475.23K*	*475.73K*	*475.83K*
178 | *7*	36-38	30	50 | *2*	16	37.5	O	34 x 4	12,500	1	*475.14K*	*475.24K*	*475.74K*	*475.84K*
200 | *8*	22-24	18	50 | *2*	16	41	O	38 x 2	9,000	1	*476.12K*	*476.22K*	*476.72K*	*476.82K*
200 | *8*	30-32	25	50 | *2*	16	41	O	38 x 3	9,000	1	*476.13K*	*476.23K*	*476.73K*	*476.83K*
200 | *8*	36-38	30	50 | *2*	16	41	O	38 x 4	9,000	1	*476.14K*	*476.24K*	*476.74K*	*476.84K*
250 | *10*	26-30	18	100 | *4*	20	42	O	52 x 2	5,000	1	*477.12K*	*477.22K*	*477.72K*	*477.82K*
250 | *10*	38-40	26	100 | *4*	20	42	O	52 x 3	5,000	1	*477.13K*	*477.23K*	*477.73K*	*477.83K*
250 | *10*	50-54	34	100 | *4*	20	42	O	52 x 4	5,000	1	*477.14K*	*477.24K*	*477.74K*	*477.84K*
300 | *12*	26-30	18	100 | *4*	30	56	O	58 x 2	5,000	1	*478.12K*	*478.22K*	*478.72K*	*478.82K*
300 | *12*	38-40	26	100 | *4*	30	56	O	58 x 3	5,000	1	*478.13K*	*478.23K*	*478.73K*	*478.83K*
300 | *12*	50-54	34	100 | *4*	30	56	O	58 x 4	5,000	1	*478.14K*	*478.24K*	*478.74K*	*478.84K*

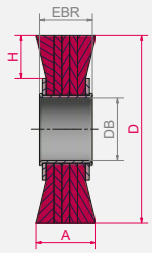

ZF = Knot type
Z = number of knots,
R = number of rows

Joint Cleaning Brushes

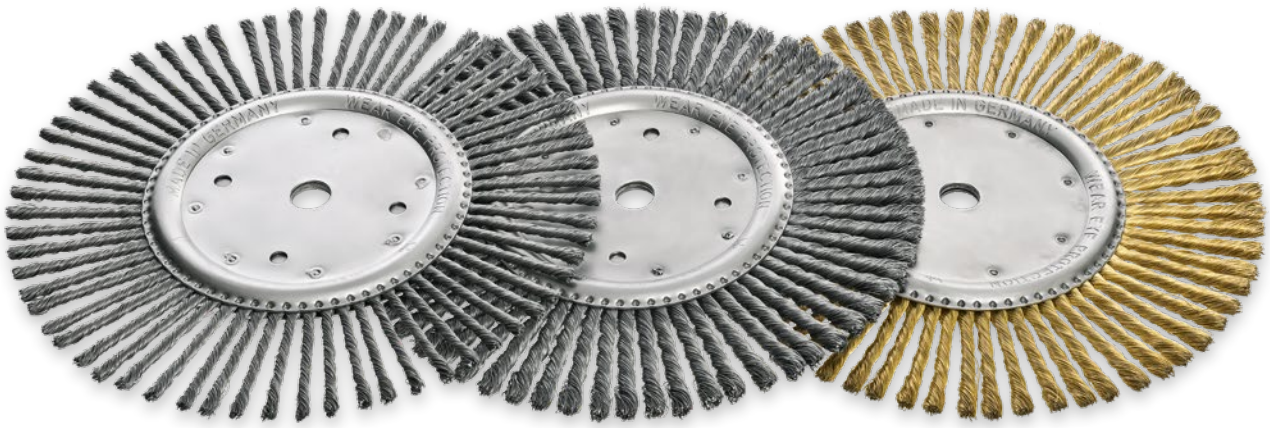

Joint Cleaning Brushes

D mm | *inch*	A mm | *inch*	DB/GI mm | *inch*	H	Z	ZF	R	RPM max.	Pack.	**STA 0.50** | *0.020"* Art.-No.	**STA 0.80** | *0.031"* Art.-No.	**STM 0.50** | *0.020"* Art.-No.
300 | *12*	6 | *1/4*	20 | *3/4*	67	64	D	1	5,000	5	**478.200.06**	*478.300.06*	*478.500.06*
300 | *12*	8 | *5/16*	20 | *3/4*	67	64	D	1	5,000	5	**478.200.08**	**478.300.08**	*478.500.08*
300 | *12*	10 | *3/8*	20 | *3/4*	67	64	D	1	5,000	5	**478.200.10**	**478.300.10**	*478.500.10*
300 | *12*	6 | *1/4*	25.4 | *1*	67	64	D	1	5,000	5	*478.225.06*	*478.325.06*	*478.520.06*
300 | *12*	8 | *5/16*	25.4 | *1*	67	64	D	1	5,000	5	*478.225.08*	*478.325.08*	*478.520.08*
300 | *12*	10 | *3/8*	25.4 | *1*	67	64	D	1	5,000	5	*478.225.10*	*478.325.10*	

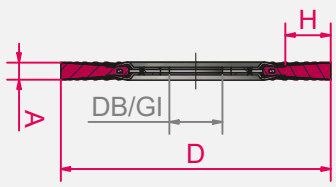

ZF = Knot type
Z = number of knots, **R** = number of rows

Joint Cleaning Brushes
Joint cleaning brushes are used for the production of expansion joints in the construction of new linings as well as in restoration and reparation. The application of this knot wheel brush is usually alike with all pavements.

Brushes with brass coated steel wire STM are very stable, hence they are often used for cleaning concrete joints.

Item Nos. in bold are available ex stock.
Consider our minimum order value for *italic printed* article numbers (see page 178).

STA = steel wire, straight
STH = steel wire, high tensile, straight
STM = brass coated steel, straight
ROH = stainless steel wire, high tensile, straight

Pipeline Brushes / Stringer Bead Brushes

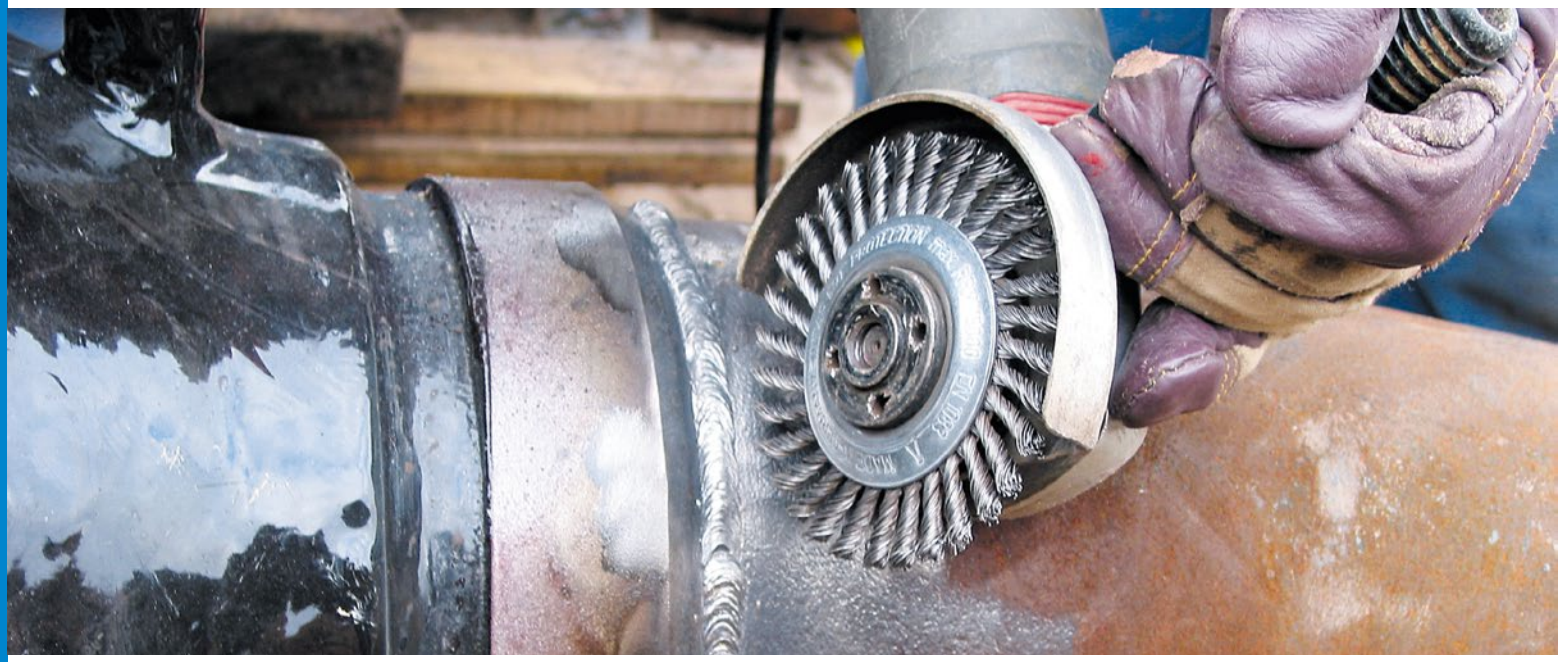

Pipeline-Brushes / Stringer Bead Brushes
LESSMANN-Pipelinebrushes are specially developed for professional use on U- and V-welds in the pipeline industry.

The remarkable features of the high quality LESSMANN Pipeline Brushes are the long lifetime and the quietness of running. They are especially narrow and therefore they are the perfect tool for cleaning all welds at tube connections.

Pipeline Brushes / Stringer Bead Brushes, left-right knotted
Left-right knotted pipeline brushes usually are more aggressive, hence they are often used for heavy brushing operations.
Besides the knots open less, therefore there are ideal for the treatment of edges.

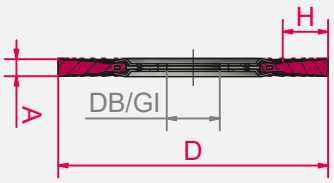

ZF = Knot type
Z = number of knots

Item Nos. in bold are available ex stock.
Consider our minimum order value for *italic printed* article numbers (see page 178).

STH = steel wire, high tensile, straight

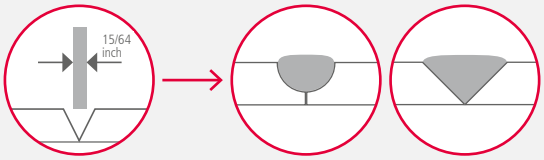

The narrow design is ideal for U and V welds

X-Lock Mount
Our wheel brushes with X-Lock-mount can be found on page 66.

Attention!
Starting in summer 2023, we will gradually convert all threads to star shape.

Six wrench flats instead of only two give you more flexibility when working.

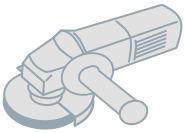

Pipeline-Brushes / Stringer Bead Brushes, Steel Wire							Bo. 22.2 | *7/8"*	M 14 x 2.0	5/8" - 11 UNC
D	A	H	Z	ZF	RPM	Pack.*	**STH 0.50** | *0.020"*	**STH 0.50** | *0.020"*	**STH 0.50** | *0.020"*
mm | *inch*	mm | *inch*				max.		Art.-No.	Art.-No.	Art.-No.
100 | *4*	6 | *1/4*	19	28	D	20,000	10	available on demand	**471.207.28**	*471.208.28*
115 | *4 1/2*	6 | *1/4*	22	32	D	15,000	1	**472.201.EZ**		
115 | *4 1/2*	6 | *1/4*	22	32	D	15,000	5/10	**472.201.32**	*472.207.32*	*472.208.32*
115 | *4 1/2*	6 | *1/4*	22	39	D	15,000	10	**472.201.39**	available on demand	available on demand
125 | *5*	6 | *1/4*	26	40	D	15,000	1	**473.201.EZ**		
125 | *5*	6 | *1/4*	26	40	D	15,000	5/10	**473.201.40**	**473.207.40**	*473.208.40*
150 | *6*	6 | *1/4*	30	48	D	12,500	5/10	**474.201.48**	*474.207.48*	*474.208.48*
178 | *7*	6 | *1/4*	36	48	D	12,500	1	**475.201.EZ**		
178 | *7*	6 | *1/4*	36	48	D	12,500	5/10	**475.201.48**	*475.207.48*	*475.208.48*
178 | *7*	6 | *1/4*	30	56	D	12,500	5/10	**475.201.56**	*475.207.56*	*475.208.56*
178 | *7*	6 | *1/4*	30	76	D	12,500	5/10	**475.201.76**	*475.207.76*	*475.208.76*
230 | *9 1/16*	6 | *1/4*	56	76	D	12,500	1	*47S.201.76*		

* Brushes with thread = packed 5 pieces per carton, brushes with bore = packed 10 pieces per carton

Pipeline Brushes / Stringer Bead Brushes

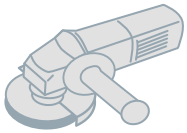

Pipeline-Brushes / Stringer Bead Brushes, Stainless Steel							Bo. 22.2 | *7/8"*	M 14 x 2.0	5/8" - 11 UNC
D	A	H	Z	ZF	RPM	Pack.*	**ROH 0.50** | *0.020"*	**ROH 0.50** | *0.020"*	**ROH 0.50** | *0.020"*
mm | *inch*	mm | *inch*				max.		Art.-No.	Art.-No.	Art.-No.
100 | *4*	6 | *1/4*	19	28	D	20,000	10	available on demand	**471.807.28**	*471.808.28*
115 | *4 1/2*	6 | *1/4*	22	32	D	15,000	1	**472.801.EZ**		
115 | *4 1/2*	6 | *1/4*	22	32	D	15,000	5/10*	**472.801.32**	*472.807.32*	*472.808.32*
115 | *4 1/2*	6 | *1/4*	22	39	D	15,000	10	**472.801.39**	available on demand	available on demand
125 | *5*	6 | *1/4*	26	40	D	15,000	1	**473.801.EZ**		
125 | *5*	6 | *1/4*	26	40	D	15,000	5/10*	**473.801.40**	**473.807.40**	*473.808.40*
150 | *6*	6 | *1/4*	30	48	D	12,500	5/10*	**474.801.48**	*474.807.48*	*474.808.48*
178 | *7*	6 | *1/4*	36	48	D	12,500	5/10*	**475.801.48**	*475.807.48*	*475.808.48*
178 | *7*	6 | *1/4*	30	56	D	12,500	5/10*	*475.801.56*	*475.807.56*	*475.808.56*
178 | *7*	6 | *1/4*	30	76	D	12,500	5/10*	*475.801.76*	*475.807.76*	*475.808.76*

* Brushes with thread = packed 5 pieces per carton, brushes with bore = packed 10 pieces per carton

Stainless Steel Brushes
LESSMANN Pipeline Brushes with stainless steel wire have green side plates. We use wire with material number 1.4310. Material number 1.4401 can be used on request.
Information on working on stainless steel you find at www.lessmann.com

X-Lock Mount
Our wheel brushes with X-Lock-mount can be found on page 66.

1 2 3

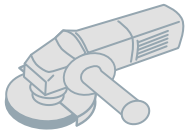

1 Pipeline-Brushes / Stringer Bead Brushes, rose bud

D mm | *inch*	A mm | *inch*	DB mm | *inch*	H	Z	ZF	RPM max.	Pack.	**STH 0.50** | *0.020"* Art.-No.
178 | *7*	6 | *1/4*	22.2 | *7/8*	28	76	B	12,500	10	**475.2B1.76**

2 Pipeline-Brushes / Stringer Bead Brushes, left-right knotted

D mm | *inch*	A mm | *inch*	DB mm | *inch*	H	Z	ZF	RPM max.	Pack.	**STH 0.50** | *0.020"* Art.-No.
178 | *7*	6 | *1/4*	22.2 | *7/8*	28	76	D	12,500	10	*475.2W1.76*

3 Pipeline-Brushes / Stringer Bead Brushes, encapsulated

D mm | *inch*	A mm | *inch*	DB mm | *inch*	H	RPM max.	Pack.	**STM 0.35** | *0.014"* Art.-No.
150 | *6*	6 | *1/4*	22.2 | *7/8*	29	9,000	1	**300.771.KG**
178 | *7*	6 | *1/4*	22.2 | *7/8*	43	9,000	1	**351.771.KG**

Pipeline Brushes / Stringer Bead Brushes with rose bud
Knotted brushes with rose bud have a longer life time. They are used for a professional treatment of weld seams in the tube and pipeline construction.

Pipeline Brushes / Stringer Bead Brushes, left-right knotted
Left-right knotted pipeline brushes usually are more aggressive, hence they are often used for heavy brushing operations.
Besides the knots open less, therefore they are ideal for the treatment of edges.

Pipeline Brushes / Stringer Bead Brushes, encapsulated
With encapsulated pipeline brushes a very exact and precise working is possible. By embedding in tough plastic the filling width always remains the same and early break of the wires can be prevented. A working width of 6 mm still allows to reach U- and V- weld seams.

Hardness Grading
From now on, the encapsulated brushes from Lessmann can be delivered in three different Shore hardness scale measurements:

- Black – Hard
- Red – Standard
- White – Soft

Please note:
The more aggressive the application, the harder the plastic material should be. Another advantage of the harder plastic material is the dimensional stability.

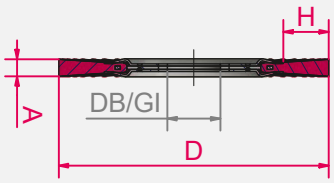

ZF = Knot type
Z = number of knots

Item Nos. in bold are available ex stock.
Consider our minimum order value for *italic printed* article numbers (see page 178).

STH = steel wire, high tensile, straight
STM = brass coated steel, crimped
ROH = stainless steel wire, high tensile, straight

Cutback Brushes

Knot types ZF

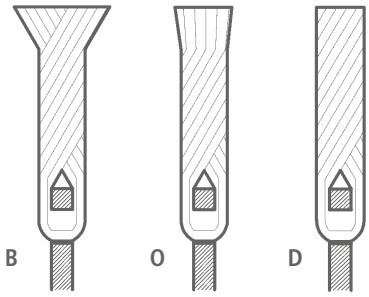

B: Rose Bud
O: Open Knot (wire ends are cut)
D: Fully knotted (wire ends are cut completely)

Cutback Brushes
for the removal of pipe coatings.

The removal of pipe-ends with brushes is a common process in the pipe industry.

To prevent corrosion, steel pipes are usually covered in epoxy resin and several layers of polyethylene (PE) or polypropylene (PP). To ensure a strong and safe welded joint during the installation of the pipes, the coating has to be removed completely on the ends of the pipes. For this process, usually several rings of knotted wire brushes are mounted together to get one large block of wheel brushes.

The LESSMANN Cutback Brushes are proven to have a long lifetime and are used by many international companies producing pipe for the oil and gas industry.

LESSMANN Cutback rings **are supplied already mounted to one another**. This ensures a perfect balancing, an even surface and a tighter fitting.

All Cutback Brushes can be purchased with left-right knotting (WZ), too.

Cutback Brushes, left-right knotted
Left-right knotted cutback brushes usually are more aggressive, hence they are often used for heavy brushing operations.
The knots of this type of brush open less, therefore there are ideal for the treatment of edges.

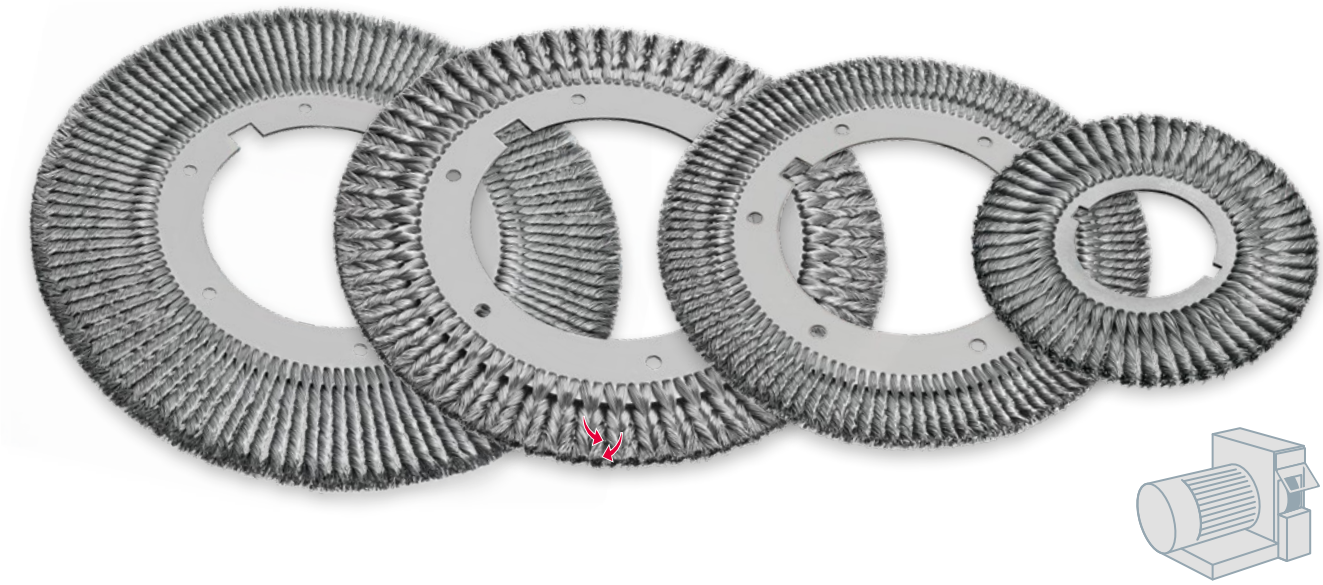

Cutback Brushes

D	A	H	DB	KN/DKN	Z	ZF		STH	ROH
mm | *inch*	mm | *inch*	mm | *inch*	mm | *inch*						
250 | *10*	13 | *33/64*	45 | *1 49/64*	102 | *4 1/64*	115.8 x 13	56	O		0.63	0.50 / 0.80
300 | *12*	13 | *33/64*	60 | *12 23/64*	102 | *4 1/64*	115.8 x 13	64	O		0.80	0.50 / 0.80
390 | *15 23/64*	13 | *33/64*	45 | *1 49/64*	200.6 | *7 57/64*	233 x 24	114	O	right-left knotted (WZ)	0.63 / 0.80	0.80
465 | *18 5/16*	13 | *33/64*	82.5 | *3 1/4*	200.6 | *7 57/64*	233 x 24	114	O		0.58 / 0.80	0.80

The table above gives you an insight into the range of brushes LESSMANN can produce. Due to modern technologies in production we can respond to individual requests and wishes of our customers (diameter, working width, bore).

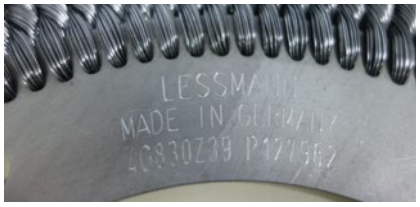

If requested, scribe markings are possible.

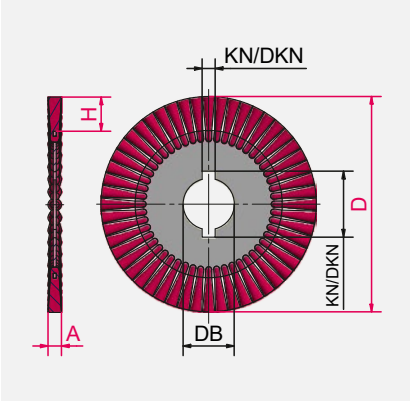

Item Nos. in bold are available ex stock.
Consider our minimum order value for *italic printed* article numbers (see page 178).

STH = steel wire, high tensile, straight

ROH = stainless steel wire, high tensile, straight

You can find our **Enquiry Forms** in the respective category under:
www.lessmann.com/index.php/en/content/view/full/61
or in the catalog from page 173

Single Segment Brushes

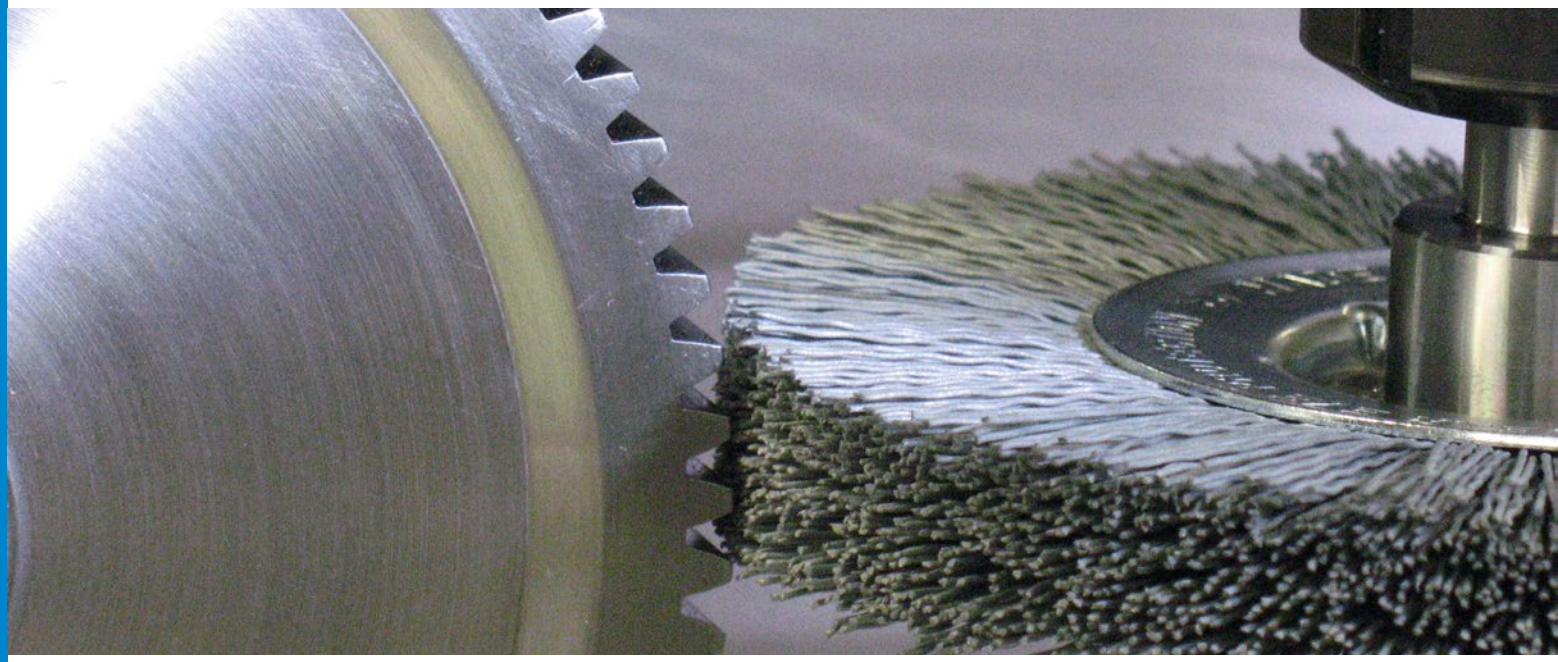

Single Segment Brushes
These brushes are mainly used for deburring purposes in stationary machines or processing centres.
The construction of these brushes allows it to assemble them to roller brushes of any desired width. Many different filling materials like steel, stainless steel or abrasive nylon with various grit are at your disposal.

Outstanding Processing
The flexible bristles align to the different shapes of working pieces.
An important advantage of the single segment brushes compared to other grinding tools, such as pads or grinding discs, is their gentle treatment.
Furthermore the brushes do not become encrusted. They are suitable for deburring work and fine polishing of stainless steel, light metal or plastic material. Besides the executions listed on this page other diameters and grit sizes are available.

Laser imprint of brushes

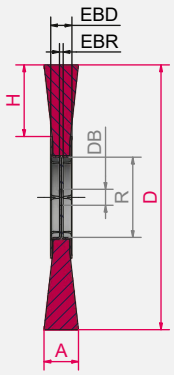

A can be up to 4 mm larger than **EBD**

EBR = 3.0 mm if R > 60
EBR = 2.4 mm if R ≤ 60

For further information on abrasive filaments please see pages 11 et seq.
Item Nos. in bold are available ex stock.
Consider our minimum order value for *italic printed* article numbers (see page 178).

SIC	= silicon carbide bristles
KK	= ceramic grit

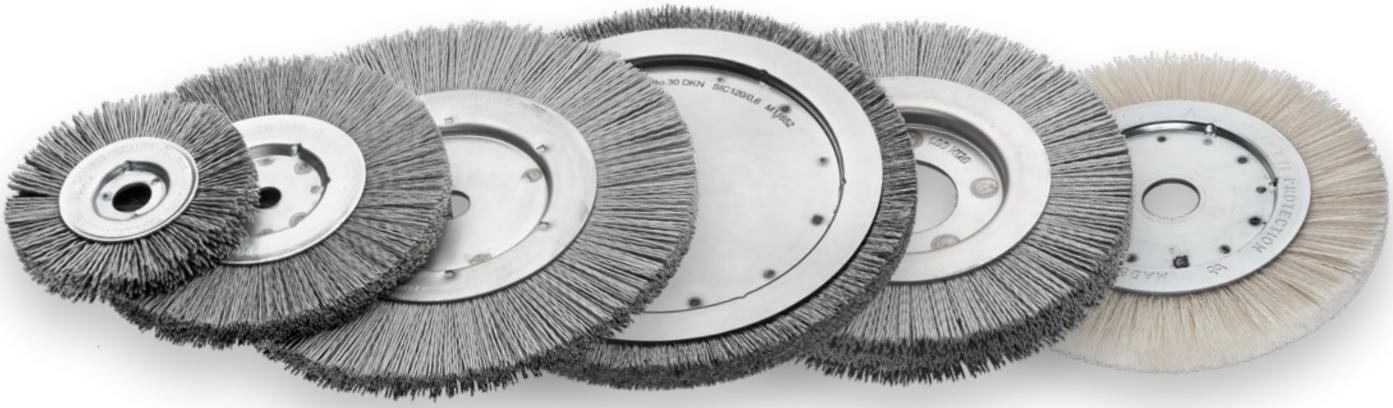

1 2 3

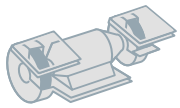

1 Single Segment Wheel Brushes, Silicon Carbide Bristles

D mm | *inch*	R	EBD	H	$DB_{Stand.}$ mm | *inch*	$DB_{min./max.}$	RPM max.	Pack.	SIC 80/1.2 Art.-No.	SIC 120/1.1 Art.-No.	SIC 120/0.6 Art.-No.	SIC 180/1.0 Art.-No.	SIC 320/0.6 Art.-No.
80 | *3 1/4*	26	12	17	12 | *1/2*	12–16	12,000	5		*310.831*	**310.841**	**310.851**	**310.871**
100 | *2*	30	12	21	12 | *1/2*	12–20	8,000	5	**320.821**	*320.831*	**320.841**	**320.851**	**320.871**
125 | *5*	30	12	33	12 | *1/2*	12–20	8,000	5	*330.821*		**330.841**	**330.851**	*330.871*
150 | *6*	50	14	32	12 | *1/2*	12–30	6,000	5	**340.821**	**340.831**	**340.841**	**340.851**	**340.871**
178 | *7*	50	14	46	12 | *1/2*	12–30	6,000	5	*350.821*	**350.831**	**350.841**	*350.851*	*350.871*
178 | *7*	60	16	41	12 | *1/2*	12–40	6,000	5			*351.841*	*351.851*	*351.871*
200 | *8*	60	16	52	12 | *1/2*	12–40	6,000	5	*361.821*	*361.831*	*361.841*	*361.851*	*361.871*
200 | *8*	80	16	43	16 | *5/8*	16–60	6,000	5		*362.831*	*362.841*	**362.851**	*362.871*
200 | *8*	100	16	32	16 | *5/8*	16–80	6,000	5		**360.831**	**360.841**	**360.851**	**360.871**
250 | *10*	100	16	57	16 | *5/8*	16–80	6,000	5		**370.831**	*370.841*	**370.851**	**370.871**
250 | *10*	120	16	45	20 | *3/4*	20–100	3,600	5			*371.841*	*371.851*	*371.871*
250 | *10*	150	19	30	25.4 | *1*	25.4–130	3,600	5		*372.831*	*372.841*	**372.851**	*372.871*
300 | *12*	120	16	70	20 | *3/4*	20–100	3,600	5			*380.841*	*380.851*	*380.871*
300 | *12*	150	19	35	25.4 | *1*	25.4–130	3,600	5		*381.831*	*381.841*	*381.851*	*381.871*
300 | *12*	200	19	30	*25.4* | *1*	25.4–170	2,600	5			*387.841*	*387.851*	

2 Single Segment Wheel Brushes, Silicon Carbide Bristles, 2 rows

D mm | *inch*	R	EBD	H	$DB_{Stand.}$ mm | *inch*	$DB_{min./max.}$	RPM max.	Pack.	SIC 120/0.6 Art.–No.	SIC 180/1.0 Art.–No.	SIC 320/0.6 Art.–No.
200 | *8*	80	27	43	16 | *5/8*	16–60	6,000	5	available on demand	*362.852*	available on demand
250 | *10*	100	27	58	16 | *5/8*	16–80	6,000	5	available on demand	*370.852*	available on demand

3 Single Segment Wheel Brushes, Ceramic Grit

D mm | *inch*	R	EBD	H	$DB_{Stand.}$ mm | *inch*	$DB_{min./max.}$	RPM max.	Pack.	KK 120/1,1 Art.-Nr.	KK 180/1,0 Art.-Nr.
100|*2*	30	12	21	12 | *1/2*	12–20	8,000	5	**320.C31**	*320.C51*
150|*6*	50	14	32	12 | *1/2*	12–20	6,000	5	**340.C31**	*340.C51*
200|*8*	100	16	32	16 | *5/8*	16–80	6,000	5	**360.C31**	*360.C51*
250|*10*	100	16	57	16 | *5/8*	16–80	8,000	5	**370.C31**	*370.C51*

Bore must be indicated in the order. Standard bore delivery ex stock, short termed. Other bores are available with extra charge: 1 – 10 pcs. EUR 6 / 11 – 25 pcs. EUR 4

Single Segment Brushes

1 2

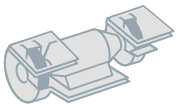

Single Segment Wheel Brushes, Steel Wire, Cord Wire

D mm | *inch*	R	EBD	H	$DB_{Stand.}$ mm | *inch*	$DB_{min./max.}$	RPM max.	Pack.	1 STA 0.20 | *0.008"* Art.–No.	1 STA 0.30 | *0.012"* Art.–No.	2 STL 0.35 | *0.014"* Art.–No.
80 | *3 1/4*	26	12	17	12 | *1/2*	12–16	12,000	5	*310.141*	**310.161**	available on demand
100 | *4*	30	12	21	12 | *1/2*	12–20	8,000	5	**320.141**	**320.161**	*320.707*
125 | *5*	30	12	33	12 | *1/2*	12–20	8,000	5	*330.141*	**330.161**	available on demand
125 | *5*	40	12	29	12 | *1/2*	12–25	8,000	5	available on demand	*331.161*	available on demand
150 | *6*	50	14	32	12 | *1/2*	12–30	6,000	5	**340.141**	**340.161**	*340.707*
178 | *7*	50	14	46	12 | *1/2*	12–30	6,000	5	*350.141*	**350.161**	available on demand
178 | *7*	60	16	41	12 | *1/2*	12–40	6,000	5	*351.141*	*351.161*	*351.707*
200 | *8*	60	16	52	12 | *1/2*	12–40	6,000	5	*361.141*	*361.161*	available on demand
200 | *8*	80	16	43	16 | *5/8*	16–60	6,000	5	*362.141*	*362.161*	*362.707*
200 | *8*	100	16	32	16 | *5/8*	16–80	6,000	5	**360.141**	**360.161**	*360.707*
250 | *10*	100	16	57	16 | *5/8*	16–80	6,000	5	*370.141*	**370.161**	available on demand
250 | *10*	120	16	45	20 | *3/4*	20–100	3,600	5	*371.141*	*371.161*	available on demand
300 | *12*	120	16	70	20 | *3/4*	20–100	3,600	5	*380.141*	*380.161*	available on demand
300 | *12*	150	19	55	25.4 | *1*	25.4–130	3,600	5		*381.161*	

Single Segment Wheel Brushes, Steel Wire, 2 rows

D mm | *inch*	R	EBD	H	$DB_{Stand.}$ mm | *inch*	$DB_{min./max.}$	RPM max.	Pack.	STH 0.35 | *0.014"* Art.–No.
200 | *8*	80	20	43	16 | *5/8*	16–60	4,500	5	*362.272*
250 | *10*	100	20	58	16 | *5/8*	16–80	6,000	5	*370.272*

Bore must be indicated in the order. Standard bore delivery ex stock, short termed. Other bores are available with extra charge: 1 – 10 pcs. EUR 6 / 11 – 25 pcs. EUR 4

Single Segment Wheel Brushes, Stainless Steel Wire

D mm | *inch*	R	EBD	H	$DB_{Stand.}$ mm | *inch*	$DB_{min./max.}$	RPM max.	Pack.	**ROF 0.20** | *0.008"* Art.-No.	**ROF 0.30** | *0.012"* Art.-No.
80 | *3 1/4*	26	12	17	12 | *1/2*	12–16	12,000	5	*310.341*	*310.361*
100 | *2*	30	12	21	12 | *1/2*	12–20	8,000	5	**320.341**	**320.361**
125 | *5*	30	12	33	12 | *1/2*	12–20	8,000	5	**330.341**	**330.361**
125 | *5*	40	12	29	12 | *1/2*	12–25	8,000	5	*331.341*	*331.361*
150 | *6*	50	14	32	12 | *1/2*	12–30	6,000	5	**340.341**	**340.361**
178 | *7*	50	14	46	12 | *1/2*	12–30	6,000	5	*350.341*	**350.361**
178 | *7*	60	16	41	12 | *1/2*	12–40	6,000	5	*351.341*	*351.361*
200 | *8*	60	16	52	12 | *1/2*	12–40	6,000	5	*361.341*	*361.361*
200 | *8*	80	16	43	16 | *5/8*	16–60	6,000	5	*362.341*	*362.361*
200 | *8*	100	16	32	16 | *5/8*	16–80	6,000	5	*360.341*	**360.361**
250 | *10*	100	16	57	16 | *5/8*	16–80	6,000	5	*370.341*	*370.361*
250 | *10*	120	16	45	20 | *3/4*	20–100	6,000	5	*371.341*	*371.361*
300 | *12*	120	16	70	20 | *3/4*	20–100	3,600	5	*380.341*	*380.361*
300 | *12*	150	19	55	25.4 | *1*	25.4–130	3,600	5		*381.361*

Bore must be indicated in the order. Standard bore delivery ex stock, short termed. Other bores are available with extra charge: 1 – 10 pcs. EUR 6 / 11 – 25 pcs. EUR 4

Stainless Steel Brushes

LESSMANN-brushes with stainless steel wire have a laser imprint.
Information on working on stainless steel you find at www.lessmann.com

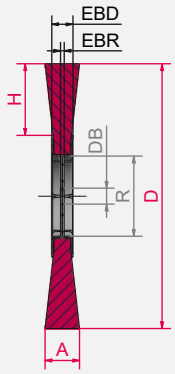

A can be up to 4 mm larger than **EBD**

EBR = 3.0 mm if R > 60
EBR = 2.4 mm if R ≤ 60

For further information on abrasive filaments please see page 11 et seq.
Item Nos. in bold are available ex stock.
Consider our minimum order value for *italic printed* article numbers (see page 178).

STA = steel wire, crimped
STH = steel wire, high tensile, crimped
STL = cord wire, crimped
ROF = stainless steel wire, crimped

Wheel Brushes

Wheel Brushes
Wheel brushes filled with crimped wire are used for the purpose of obtaining different surface finishing:
- the removal of rust, paint and dirt
- for roughening, deburring, stripping or polishing.

Big or Small?
A decisive factor for choosing the most suitable brush is the wire and tube diameter. Brushes with a larger tube diameter (measure R) are filled with more wire, are more aggressive and have a longer life.
In our catalogue are the usual tube diameters – other diameters can also be supplied.
More technical instruction such as peripheral speed etc. see pages 8 et seq.

The bore must be indicated in the order. Without any instruction delivery will be with standard bore "d Stand".

Other filling materials, filling diameters and special executions
Take advantage of the LESSMANN range of products, of the experience in developing and producing brushes! We are able to produce special executions on demand.

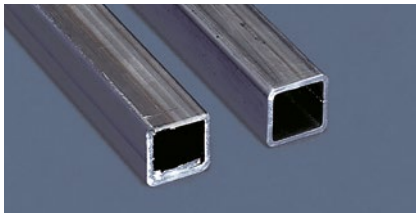

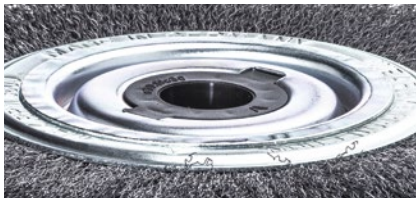

Plate with tube 80 and 100 (Set 4 / 5)

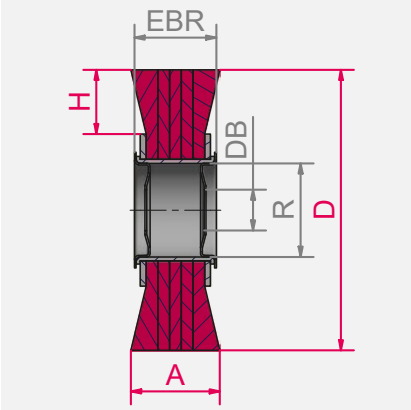

Adapter Set
All brushes are supplied with adapter sets for easy mounting on all popular grinding machines. The adapters have the following dimensions:

Set 1 / tube 30:
30 / 1" / 22.2 / 20 / 16 / 1/2" / 12
Set 2 / tube 40:
40 / 32 / 1" / 22.2 / 20 / 16 / 1/2"
Set 3 / tube 50:
50 / 32 / 1" / 22.2 / 20 / 16 / 1/2"
Set 4 / tube 80 + 100:
brushes with metal discs, bore 50.8 and double keyway 7x13;
plus adapter to bore 30.
Set 5 / tube 80 + 100:
brushes with metal discs, bore 50.8 and double keyway 7x13;
plus adapter to bore 32.

By usage without adapter set the actual size might be up to 0.2 mm below nominal size.

You can find our **tutorials** here:
www.lessmann.com/index.php/en/content/view/full/711

Item Nos. in bold are available ex stock.
Consider our minimum order value for *italic printed* article numbers (see page 178).

STA = steel wire, crimped
STM = brass coated steel, crimped

1 2

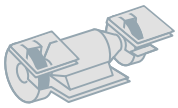

EAN

Wheel Brushes, Steel Wire, Brass Coated Steel Wire

									1			2
D	A	EBR	R	H	$DB_{Stand.}$	$DB_{min./max.}$	RPM	Pack.	**STA 0.15** | *0.006"*	**STA 0.20** | *0.008"*	**STA 0.30 / *0.35**	**STM 0.30** | *0.012"*
mm | *inch*					mm | *inch*		max.		Art.-No.	Art.-No.	*0.012" / 0.014"*	Art.-No.
80 | *3 1/4*	18-20	18	20	20	10 | *3/8*	10-20	10,000	1	available on demand	**312.142**	**312.162**	
80 | *3 1/4*	25-27	24	20	20	10 | *3/8*	10-20	10,000	1	available on demand	*312.143*	**312.163**	
100 | *4*	20-22	19	30	23	Set 1	10-30	8,000	1	*323.132*	**323.142**	**323.162**	
100 | *4*	28-30	25	30	23	Set 1	10-30	8,000	1	*323.133*	**323.143**	**323.163**	
125 | *5*	21-23	20	40	27	Set 2	13-40	6,000	1	*334.132*	**334.142**	**334.162**	
125 | *5*	29-31	26	40	27	Set 2	13-40	6,000	1	available on demand	*334.143*	**334.163**	
150 | *6*	22-24	20	40	33	Set 2	13-40	6,000	1	*344.132*	**344.142**	**344.172***	
150 | *6*	30-34	26	40	33	Set 2	13-40	6,000	1	*344.133*	**344.143**	**344.173***	
150 | *6*	23-25	22	50	33	Set 3	13-50	6,000	1	*345.132*	**345.142**	**345.162**	*345.762*
150 | *6*	30-34	30	50	33	Set 3	13-50	6,000	1	*345.133*	**345.143**	**345.163**	
178 | *7*	23-26	22	50	37	Set 3	16-50	6,000	1	available on demand	**355.142**	**355.162**	*355.762*
178 | *7*	32-35	30	50	37	Set 3	16-50	6,000	1	*355.133*	**355.143**	**355.163**	
200 | *8*	24-27	22	50	48	Set 3	16-50	6,000	1	*365.132*	**365.142**	**365.172***	*365.762*
200 | *8*	35-38	30	50	48	Set 3	16-50	6,000	1	*365.133*	**365.143**	**365.173***	*365.763*
200 | *8*	28-32	29	80	38	Set 4+1	16-80	4,500	1	available on demand	**366.142**	**366.162**	*366.762*
200 | *8*	40-45	39	80	38	Set 4+1	16-80	4,500	1	available on demand	*366.143*	**366.163**	
250 | *10*	30-35	29	80	50	Set 4+1	20-80	3,600	1	available on demand	**376.142**	**376.162**	
250 | *10*	42-45	39	80	50	Set 4+1	20-80	3,600	1	available on demand	available on demand	**376.163**	
250 | *10*	32-37	30	100	50	Set 4+1	20-100	3,600	1	available on demand	**377.142**	**377.162**	*377.762*
250 | *10*	43-48	39	100	50	Set 4+1	20-100	3,600	1	available on demand	*377.143*	**377.163**	
250 | *10*	55-60	49	100	50	Set 4+1	20-100	3,600	1	available on demand	*377.144*	**377.164**	
300 | *12*	35-40	30	100	60	Set 4	30-100	3,000	1	available on demand	**387.142**	**387.162**	
300 | *12*	47-52	39	100	60	Set 4	30-100	3,000	1	available on demand	*387.143*	**387.163**	
300 | *12*	30-35	34	120	50	Set 4	32-100	3,000	1			**388.172***	
300 | *12*	42-47	46	120	50	Set 4	32-100	3,000	1			**388.173***	
350 | *14*	35-40	30	100	85	Set 5	32-100	2,400	1	available on demand	*397.142*	**397.172***	
350 | *14*	55-60	39	100	85	Set 5	32-100	2,400	1	available on demand	*397.143*	**397.173***	

Bore must be indicated in the order. Standard bore delivery ex stock, short termed. Other bores are available with extra charge: 1 – 10 pcs. EUR 6 / 11 – 25 pcs. EUR 4

Wheel Brushes

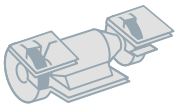

EAN

Wheel Brushes, Stainless Steel, Silicon Carbide Bristles

D mm | *inch*	A	EBR	R	H	$DB_{Stand.}$ mm | *inch*	$DB_{min./max.}$	RPM max.	Pack.	**ROF 0.20** | *0.008"* Art.-No.	**ROF 0.30** | *0.012"* Art.-No.	**RO4 0.30** | *0.012"* Art.-No.	**SIC 80/1.2** Art.-No.	**SIC 180/1.0** Art.-No.
80 | *3 1/4*	18-20	18	20	20	10 | *3/8*	10-20	10,000	1	*312.342*	**312.362**			
80 | *3 1/4*	25-27	24	20	20	10 | *3/8*	10-20	10,000	1	available on demand	*312.363*			
100 | *4*	20-22	19	30	23	Set 1	10-30	8,000	1	*323.342*	**323.362**			
100 | *4*	28-30	25	30	23	Set 1	10-30	8,000	1	*323.343*	**323.363**			
125 | *5*	21-23	20	40	27	Set 2	13-40	6,000	1	*334.342*	**334.362**			
125 | *5*	29-31	26	40	27	Set 2	13-40	6,000	1	*334.343*	**334.363**			
150 | *6*	22-24	20	40	33	Set 2	13-40	6,000	1	*344.342*	**344.362**			
150 | *6*	30-34	26	40	33	Set 2	13-40	6,000	1	*344.343*	**344.363**			
150 | *6*	18-20	20	50	33	Set 3	13-50	6,000	1				**345.822**	**345.852**
150 | *6*	23-25	22	50	33	Set 3	13-50	6,000	1	*345.342*	**345.362**	**345.462.V4**		
150 | *6*	30-34	30	50	33	Set 3	13-50	6,000	1	*345.343*	**345.363**		**345.823**	**345.853**
178 | *7*	23-26	22	50	37	Set 3	16-50	6,000	1	**355.342**	**355.362**			
178 | *7*	30-32	29	50	37	Set 3	16-50	6,000	1				**355.823**	**355.853**
178 | *7*	32-35	30	50	37	Set 3	16-50	6,000	1	available on demand	**355.363**			
200 | *8*	24-27	22	50	33	Set 3	16-50	6,000	1			**365.462.V4**		
200 | *8*	24-27	22	50	48	Set 3	16-50	6,000	1	**365.342**	**365.362**			
200 | *8*	28-30	29	50	38	Set 3	16-50	3,600	1				**365.823**	**365.853**
200 | *8*	35-38	30	50	48	Set 3	16-50	6,000	1	*365.343*	**365.363**			
200 | *8*	28-32	29	80	38	Set 4+1	16-80	4,500	1	*366.342*	**366.362**			
200 | *8*	40-45	39	80	38	Set 4+1	16-80	4,500	1	*366.343*	**366.363**			
250 | *10*	30-35	29	80	50	Set 4+1	20-80	3,600	1	*376.342*	**376.362**			
250 | *10*	42-45	39	80	50	Set 4+1	20-80	3,600	1	*376.343*	**376.363**			
250 | *10*	32-37	30	100	50	Set 4+1	20-100	3,600	1	*377.342*	**377.362**			
250 | *10*	43-48	39	100	50	Set 4+1	20-100	3,600	1	*377.343*	**377.363**			
300 | *12*	35-40	30	100	60	Set 4	30-100	3,000	1	*387.342*	**387.362**			
300 | *12*	47-52	39	100	60	Set 4	30-100	3,000	1	*387.343*	*387.363*			
350 | *14*	35-40	30	100	85	Set 5	32-100	2,400	1	available on demand	*397.362*			

Bore must be indicated in the order. Standard bore delivery ex stock, short termed. Other bores are available with extra charge: 1 – 10 pcs. EUR 6 / 11 – 25 pcs. EUR 4

Stainless Steel Brushes
Information on working on stainless steel you find at www.lessmann.com

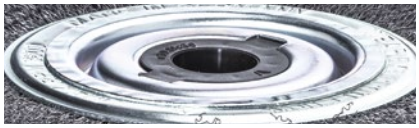

Plate with tube 80 and 100
(Set 4 / 5)

EAN

Wheel Brushes, Brass Wire, Bronze Wire

D mm | *inch*	A	EBR	R	H	$DB_{Stand.}$ mm | *inch*	$DB_{min./max.}$	RPM max.	Pack.	**MES 0.20** | *0.008"* Art.-No.	**MES 0.30** | *0.012"* Art.-No.	**BRO 0.30** Art.-No.
80 | *3 1/4*	18-20	18	20	20	10 | *3/8*	10-20	10,000	1	**312.542**	*312.562*	
80 | *3 1/4*	25-27	24	20	20	10 | *3/8*	10-20	10,000	1	*312.543*	*312.563*	
100 | *4*	20-22	19	30	23	Set 1	10-30	8,000	1	**323.542**	*323.562*	
100 | *4*	28-30	25	30	23	Set 1	10-30	8,000	1	*323.543*	*323.563*	
125 | *5*	21-23	20	40	27	Set 2	13-40	6,000	1	**334.542**	*334.562*	
125 | *5*	29-31	26	40	27	Set 2	13-40	6,000	1	*334.543*	available on demand	
150 | *6*	22-24	20	40	33	Set 2	13-40	6,000	1	**344.542**	**344.562**	**344.662**
150 | *6*	30-32	26	40	33	Set 2	13-40	6,000	1	*344.543*	**344.563**	
150 | *6*	23-25	22	50	33	Set 3	13-50	6,000	1	**345.542**	**345.562**	*345.662.MS**
150 | *6*	30-34	30	50	33	Set 3	13-50	6,000	1	*345.543*	**345.563**	
178 | *7*	23-26	22	50	37	Set 3	16-50	6,000	1	*355.542*	**355.562**	
178 | *7*	32-35	30	50	37	Set 3	16-50	6,000	1	*355.543*	**355.563**	
200 | *8*	24-27	22	50	48	Set 3	16-50	6,000	1	**365.542**	**365.562**	
200 | *8*	35-38	30	50	48	Set 3	16-50	6,000	1	*365.543*	**365.563**	
200 | *8*	28-32	29	80	38	Set 4+1	16-80	4,500	1	*366.542*	**366.562**	
200 | *8*	40-45	39	80	38	Set 4+1	16-80	4,500	1	*366.543*	*366.563*	
250 | *10*	30-35	29	80	50	Set 4+1	20-80	3,600	1	*376.542*	*376.562*	
250 | *10*	42-45	39	80	50	Set 4+1	20-80	3,600	1	*376.543*	available on demand	
250 | *10*	32-37	30	100	50	Set 4+1	20-100	3,600	1	available on demand	**377.562**	
250 | *10*	43-48	39	100	50	Set 4+1	20-100	3,600	1	available on demand	available on demand	
300 | *12*	35-40	30	100	60	Set 4	30-100	3,000	1	available on demand	**387.562**	
300 | *12*	47-52	39	100	60	Set 4	30-100	3,000	1	available on demand	available on demand	
350 | *14*	35-40	30	100	85	Set 5	32-100	2,400	1	available on demand	*397.562*	

* Bronze Wire, fittings brass (low-sparkling)

Bore must be indicated in the order.
Standard bore delivery ex stock, short termed.
Other bores are available with extra charge:
1 – 10 pcs. EUR 6 / 11 – 25 pcs. EUR 4

Item Nos. in bold are available ex stock.
Consider our minimum order value for *italic printed* article numbers (see page 178).

ROF = stainless steel wire, crimped
RO4 = premium-quality stainless steel
MES = brass wire, crimped
BRO = bronze wire, crimped
SIC = silicon carbide bristles

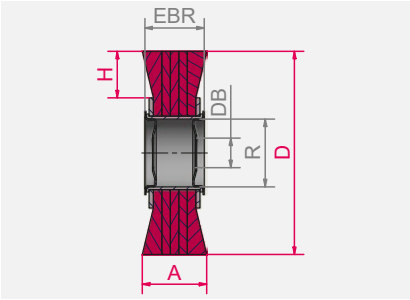

Brushes for the wood machining industry

Satinising Brushes
Satinising brushes are the perfect tool for satining, polishing, abrading/smoothing, matting and structuring.

Staple Set Wheel and Disc Brushes
Wheel and Disc Brushes with abrasive nylon filament are used for the wood machining industry. Used on angle grinders, the disc brushes are ideal for maintaining, cleaning, strucutring or polishing wood.

Besides the brushes are used for giving wood a rustic effect or for roughening it before treating with colour or lacquer.
The brushes are very effective when working on large surfaces.

Structuring Brushes with Shank
These brushes are special brushes which can be used for wood grain surfaces.

Item Nos. in bold are available ex stock.
Consider our minimum order value for *italic printed* article numbers (see page 178).

STM	= brass coated steel, crimped
STL	= cord wire, crimped
ROF	= stainless steel wire, crimped
SIC	= silicon carbide bristles
FIB	= fibre
PA	= polyamide, crimped

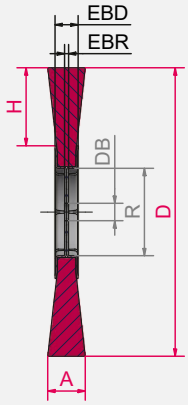

1 Satinising Brushes

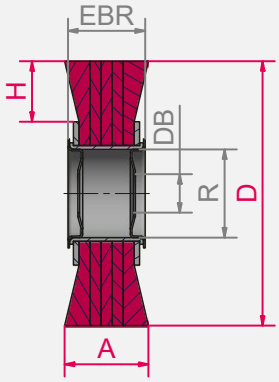

2 Satinising Brushes

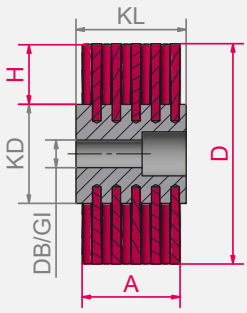

3 Wheel Brushes

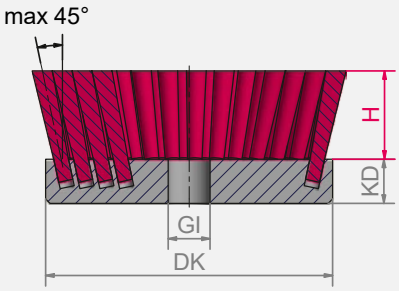

4 Disc Brushes

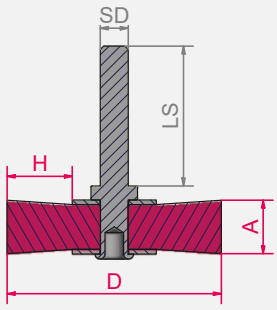

5 Structuring Brushes

1

2

3

5

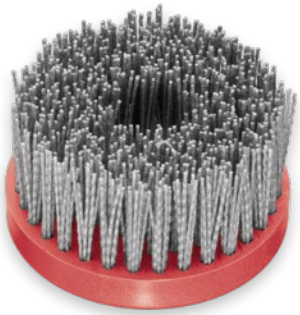

4

EAN

Satinising Brushes

	D mm | *inch*	A mm | *inch*	EBR mm | *inch*	R mm | *inch*	H	DB mm | *inch*	RPM max.	Pack.	**ROF 0.20** | *0.008"* Art.-No.	**SIC 80/1.2** Art.-No.	**STL 0.25** | *0.010"* Art.-No.	**FIB/PA 0.4** | *0.016"* Art.-No.
1	100 | *4*	12 | *1/2*	12 | *1/2*	30 | *1 1/4*	21	19.2 | *3/4*	8,000	5	*320.341.19*	*320.821.19*	*320.703.19*	
2	100 | *4*	70 | *2 3/4*	70 | *2 3/4*	30 | *1 1/4*	23	19.2 | *3/4*	8,000	1	**323.348.19**	**323.828.19**	**323.704.19**	
	100 | *4*	100 | *4*	102 | *4*	30 | *1 1/4*	23	19.2 | *3/4*	8,000	1	*323.305.19*	*323.805.19*	**323.705.19**	**323.900.10**

	D mm | *inch*	A mm | *inch*	EBR mm | *inch*	R mm | *inch*	H	DB mm | *inch*	RPM max.	Pack.	**STM 0.35** | *0.014"* Art.-No.	**SIC 80/1.2** Art.-No.	**SIC 120/1.1** Art.-No.
2	100 | *4*	120 | *4 3/4*	122 | *4 3/4*	30 | *1 1/4*	23	12.7 | *1/2*	8,000	1	*323.770.13*	*323.820.13*	*323.830.13*

Bore must be indicated in the order. Standard bore with double keyway 5,2 x 23 mm delivery ex stock, short termed.
Other bores are available with extra charge: 1 – 10 pcs. EUR 6 / 11 – 25 pcs. EUR 4

3 Staple Set Wheel Brushes

D mm | *inch*	KL mm | *inch*	A mm | *inch*	GI	KD	RPM max.	Pack.	**SIC 46/1.6** Art.-No.	**SIC 60/1.5** Art.-No.	**SIC 80/1.2** Art.-No.	**SIC 120/1.10** Art.-No.	**STM 0.30** Art.-No.
140 | *5 1/2*	58 | *2 9/32*	40 | *1 5/8*	M 14	80	2,500	1	*402.881*	*402.882*	**402.880**	*402.883*	**402.780**
140 | *5 1/2*	90 | *3 1/23*	75 | *3*	M 14	80	2,500	1	*402.891*	*402.892*	**402.890**	*402.893*	

4 Staple Set Disc Brushes

Filling	DK mm | *inch*	KD mm | *inch*	H mm | *inch*	GI	RPM max.	Pack.	Art.-No.
SIC 46/1.6	130 | *5 1/8*	20 | *3/4*	50 | *2*	M 14 x 2.0	2,500	1	**405.843**
SIC 60/1.5	130 | *5 1/8*	20 | *3/4*	50 | *2*	M 14 x 2.0	2,500	1	**405.844**
SIC 80/1.2	130 | *5 1/8*	20 | *3/4*	50 | *2*	M 14 x 2.0	2,500	1	**405.845**

Structuring Brushes with Shank Ø 8 mm

D mm | *inch*	A	H	RPM max.	Pack.	5 **STM 0.25** | *0.010"* Art.-No.	**SIC 80/1.2** Art.-No.
80 | *3 1/4*	35 | *1 3/8*	25 | *31/32*	4,000	1	**418.704**	
80 | *3 1/4*	35 | *1 3/8*	24 | *15/16*	15,000	1		**418.826**

Stripping brushes

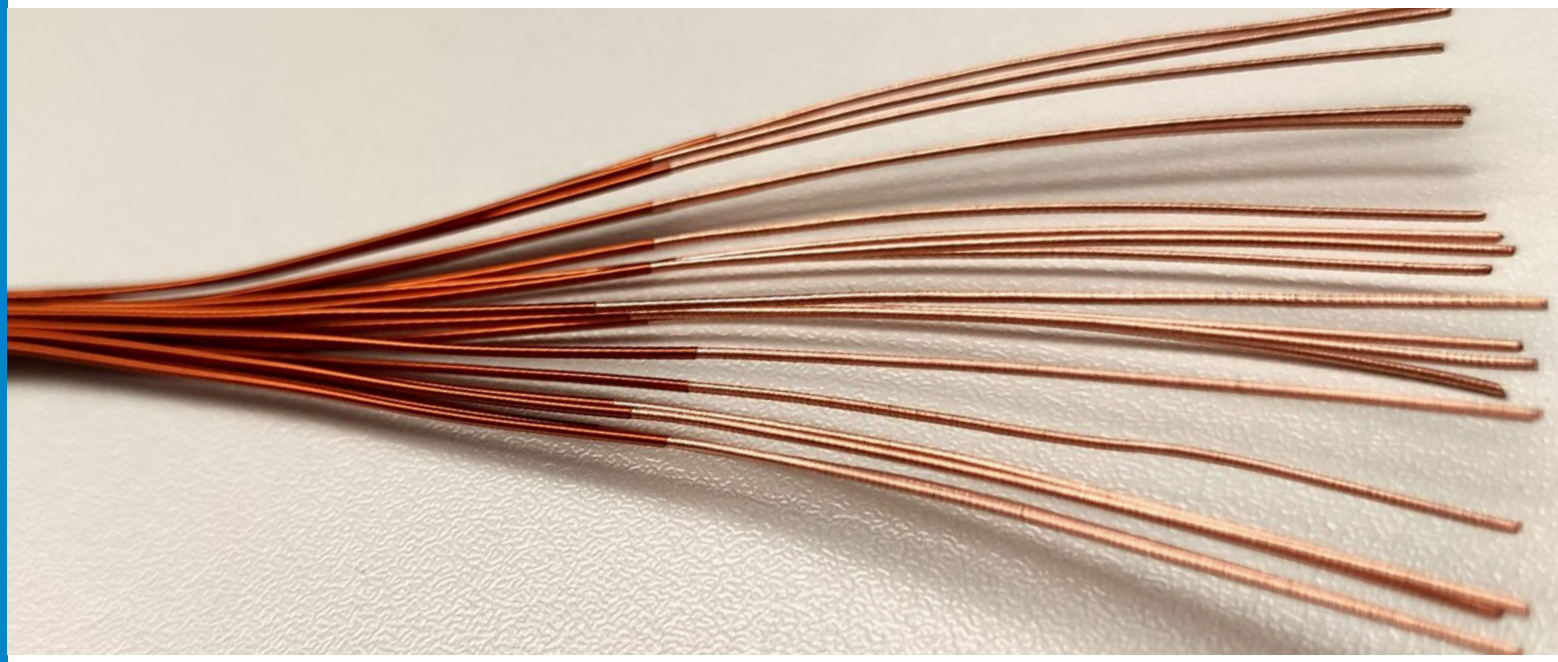

For fast wiring
These brushes are specifically designed for a single application: To remove layers of paint and other insulating materials from cables and electrical conductors. They are installed in hand-held or stationary machines.
The ground surface of the wires as well as the precise concentricity allow a gentle removal of lacquer from cables without overloading them.

Functionality of the devices
In all devices the cable is stripped between two rotating brushes. The running direction of the brushes determines whether a tensile force is acting on the cable. If the brushes rotate in opposite directions, the cable is pulled into the device, whereas if the brushes rotate in the same direction, no pulling force is generated.
With different types of brushes the stripping quality can be adapted and optimized to the cable diameter and insulation material. In addition, they can be continuously adjusted to cables of different thickness by means of a locking screw.

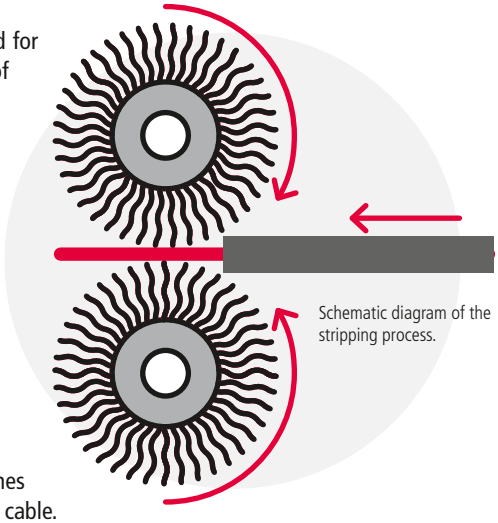

Schematic diagram of the stripping process.

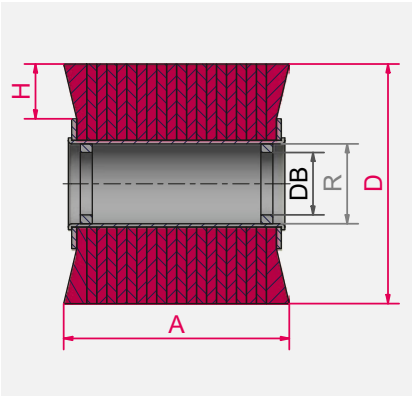

Item Nos. in bold are available ex stock.
Consider our minimum order value for *italic printed* article numbers (see page 178).

STA = steel wire, crimped

STM = brass coated steel, crimped

1

2

3

1 Stripping brushes, steel wire

D mm | *inch*	A mm | *inch*	R mm | *inch*	DB mm	RPM max.	Pack.	**STA 0.10** | *0.004"* Art.-Nr.	**STA 0.15** | *0.006"* Art.-Nr.	**STA 0.20** | *0.008"* Art.-Nr.	**STA 0.25** | *0.010"* Art.-Nr.	**STA 0.30** | *0.012"* Art.-Nr.
30 | *1 1/8*	20 | *3/4*	8 | *3/8*	6	20.000	10	**301.213.10**	**301.213.15**	**301.213.20**	*301.213.25*	*301.213.30*
35 | *1 3/8*	20 | *3/4*	8 | *3/8*	6	18.000	10	*301.214.10*	*301.214.15*	**301.214.20**	*301.214.25*	**301.214.30**
40 | *1 5/8*	25 | *1*	12 | *1/2*	10	18.000	10	*301.225.10*	**301.225.15**	**301.225.20**	*301.225.25*	**301.225.30**
80 | *3 1/8*	30 | *1 1/8*	30 | *1 1/8*	16	8.000	10			*301.236.20*	*301.236.25*	**301.236.30**

2 Stripping brushes, brass coated steel wire

D mm | *inch*	A mm | *inch*	R mm | *inch*	DB mm	RPM max.	Pack.		**STM 0.15** | *0.006"* Art.-Nr.	**STM 0.20** | *0.008"* Art.-Nr.	**STM 0.25** | *0.010"* Art.-Nr.	**STM 0.30** | *0.012"* Art.-Nr.
30 | *1 1/8*	20 | *3/4*	8 | *3/8*	6	20.000	10		*301.713.15*	*301.713.20*	*301.713.25*	
35 | *1 3/8*	20 | *3/4*	8 | *3/8*	6	18.000	10		**301.714.15**	*301.714.20*	*301.714.25*	*301.724.30*
40 | *1 5/8*	25 | *1*	12 | *1/2*	10	18.000	10			**301.725.20**	*301.725.25*	*301.725.30*
80 | *3 1/8*	30 | *1 1/8*	30 | *1 1/8*	16	8.000	10			*301.736.20*		**301.736.30**

3 Stripping brushes, encapsulated steel wire

D mm | *inch*	A mm | *inch*	R mm | *inch*	DB mm	RPM max.	Pack.			**STA 0.20** | *0.008"* Art.-Nr.		
35 | *1 3/8*	20 | *3/4*	8 | *3/8*	6	12.000	10			*3KG.214.20*		
40 | *1 5/8*	25 | *1*	12 | *1/2*	10	18.000	10			*3KG.215.20*		

Band Saw Brushes

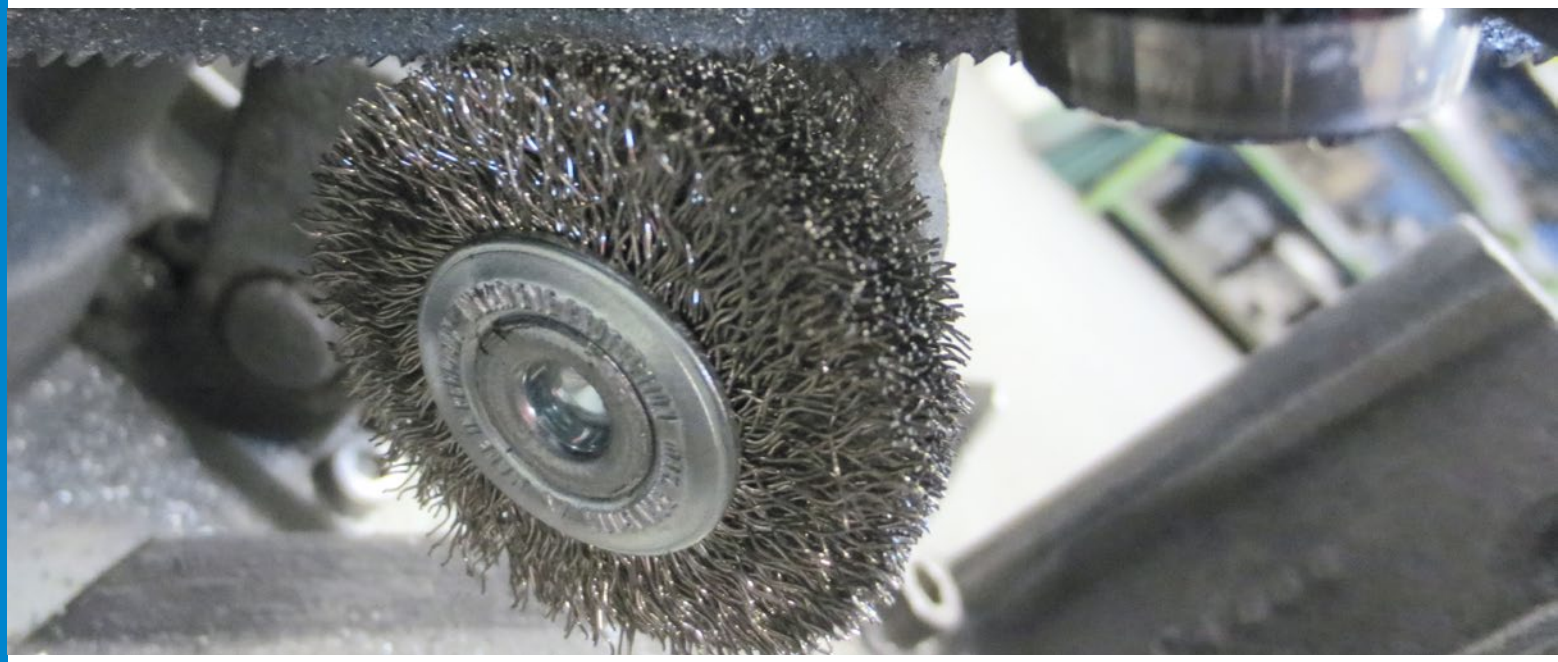

Band Saw Brushes
Wheel Brushes in circular saws or band saws are used for cleaning the chipping space. A wheel brush with diameter 80–100 mm is pressed against the saw blade (circular or band saw). By moving the saw blade or band the brush is rolling and it taking the chipping out of the shipping space. Hence a built-up edge is prevented and the durability of the saw blade extended. The used wheel brushes usually are with steel wire, corded wire or nylon filament.

Notice:
The brushes are suitable for all common machines.

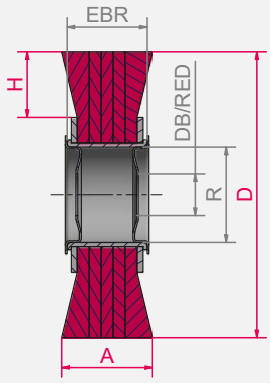

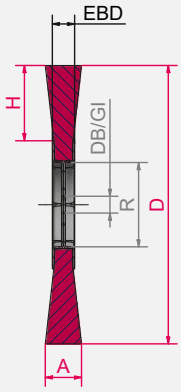

A can be up to 4 mm larger than **EBR**

EBD = 3.0 mm if R > 60
EBD = 2.4 mm if R ≤ 60

Item Nos. in bold are available ex stock.
Consider our minimum order value for *italic printed* article numbers (see page 178).

STA	= steel wire, crimped
STM	= brass coated steel, crimped
STL	= cord wire, crimped
PA	= polyamide, crimped

1

2

3

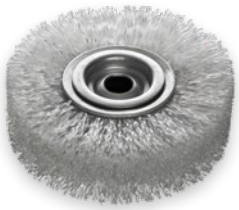

4

5

6

7

8

Band Saw Brushes, polyamide

	D mm | *inch*	A mm | *inch*	R mm | *inch*	H mm | *inch*	DB mm	RPM max.	Pack.	**PA 0.50** | *0.020"* Art.-Nr.	**PA 0.80** | *0.031"* Art.-No.	**PA 1.00** | *0.039"* Art.-No.
1	85 | *3 11/32*	10 | *25/64*	30 | *1 3/16*	14 | *35/64*	12	8,000	10	*300.091*		
	100 | *3 15/16*	13 | *33/64*	30 | *1 3/16*	21 | *53/64*	12	8,000	10	**320.001**	**320.003**	**320.009**
	100 | *3 15/16*	13 | *33/64*	30 | *1 3/16*	21 | *53/64*	13	8,000	10	**320.004**		
	125 | *4 59/64*	13 | *33/64*	30 | *1 3/16*	33 | *1 19/64*	13	8,000	5			**330.001**
2	100 | *3 15/16*	13 | *33/64*	30 | *1 3/16*	21 | *53/64*	SW 17	8,000	10	**320.00K.17**	*320.01K.17*	
3	100 | *3 15/16*	20-22 | *25/32-55/64*	30 | *1 3/16*	23 | *29/32*	12	8,000	10		*323.002*	
4	100 | *3 15/16*	20 | *25/32*	30 | *1 3/16*	23 | *29/32*	12	8,000	5		*323.003**	

* bore with plastic sleeve

Band Saw Brushes, steel wire, brass coated steel wire, cord wire

	D mm | *inch*	A mm | *inch*	R mm | *inch*	H mm | *inch*	DB mm	RPM max.	Pack.	**STA 0.20** Art.-No.	**STA 0.30** Art.-No.	**STM 0.20** Art.-No.	**STM 0.30** Art.-No.	**STL 4 x 0.25** Art.-No.
5	100 | *3 15/16*	13 | *33/64*	30 | *1 3/16*	21 | *53/64*	12	8,000	10		**320.161**			
	100 | *3 15/16*	13 | *33/64*	30 | *1 3/16*	21 | *53/64*	13	8,000	10		**320.161.13**			
6	100 | *3 15/16*	12 | *15/32*	30 | *1 3/16*	21 | *53/64*	SW 17	8,000	10		**320.16K.17**			
7	80 | *3 5/32*	12 | *15/32*	20 | 25/32	20 | 25/32	10	15,000	10	**312.141**				
8	60 | *2 23/64*	10-12 | 25/64-*5/32*	8 | 5/16	19 | 3/4	6	15,000	10			*300.742*		
	80 | *3 5/32*	15 | *19/32*	10 | *25/64*	27 | 1 1/6	6.8	15,000	10			*311.742.01*		
	80 | *3 5/32*	15 | *19/32*	10 | *25/64*	27 | 1 1/6	8	15,000	10				**311.762**	
	80 | *3 5/32*	18-20 | 45/64-25/32	10 | *25/64*	27 | 1 1/6	6	15,000	10					**310.702.06**

Special Models

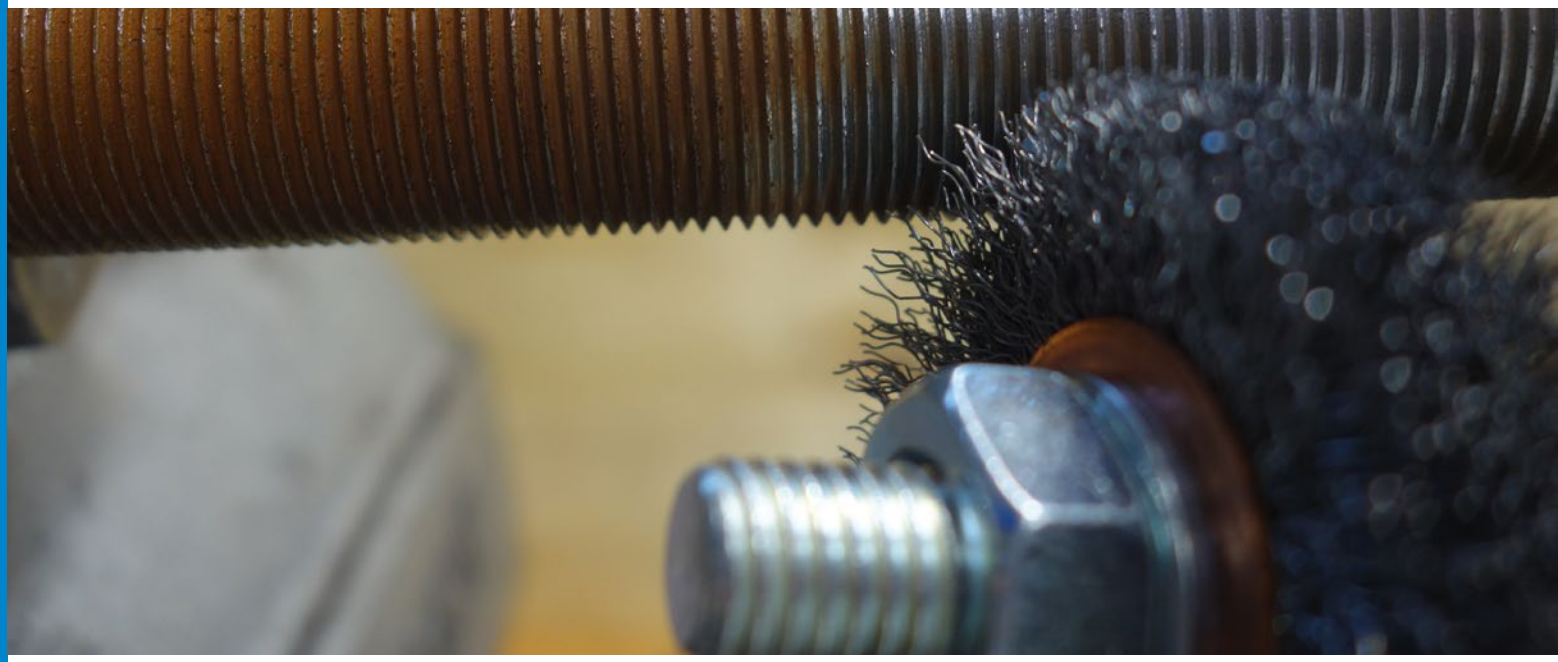

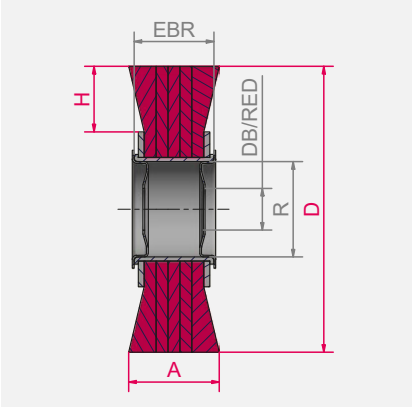

Small diameter crimped wheels SDW
LESSMANN small diameter crimped wheels have a manifold use, e.g. for deburring, cleaning, derusting or paint stripping on various work pieces and surfaces. A typical application e.g. is the cleaning of interior and exterior threads or the treatment of areas which are hard to reach.
The brushes are inserted directly into the machine or are mounted into a drilling machine or fast-moving item with a suitable drive arbor. Depending on the application and requirements several brushes can be mounted in a row. Suitable adapters are available on request.
The typical filling material LESSMANN offers is steel wire, stainless steel wire or abrasive nylon. On request other wire diameters and filling materials are available. All brushes are manufactured with a copper shell.

Wheel Brushes for the treatment of hard metal
Wheel brushes with diamond filling are often used for the rounding of edges of carbide or diamond tools.
Cutting edges on carbide tools extend the lifetime and allow a higher cutting speed. The treatment on major cutting edges of drills are mainly operated manually. LESSMANN wheel brushes with diamond support to decrease abrasion and to improve the surface quality of the work piece. Due to the consistent and narrow filling a clean and steady dipping of the edges is possible.
Surfaces of chip flutes of carbide drills are finished with brushes with aluminum oxide filling material. Finished chip flutes have a better process stability when drilling.

Stainless Steel Brushes
Information on working on stainless steel you find at www.lessmann.com

Item Nos. in bold are available ex stock.
Consider our minimum order value for *italic printed* article numbers (see page 178).

STA	= steel wire, crimped
ROF	= stainless steel wire, crimped
SIC	= silicon carbide bristles
AO	= aluminium oxide bristles

1

2 3 4

Small Diameter crimped Wheels SDW

1

D mm | *inch*	A mm | *inch*	EBR mm | *inch*	DB mm | *inch*	H mm | *inch*	RPM max.	Pack.	**STA 0.15** | *0.006"* Art.-No.	**STA 0.20** | *0.008"* Art.-No.	**STA 0.35** | *0.014"* Art.-No.	**ROF 0.15** | *0.006"* Art.-No.
50 | *2*	10 | *3/8*	7 | *9/32*	13 | *1/2*	13 | *1/2*	20,000	10	**35E.136**	**35E.146**		**35E.336**
63 | *2 1/2*	10 | *3/8*	7 | *9/32*	13 | *1/2*	20 | *3/4*	20,000	10		**36E.146**	**36E.176**	
75 | *3*	12 | *1/2*	7 | *9/32*	13 | *1/2*	20 | *3/4*	20,000	10		*37E.146*		**37E.336**
75 | *3*	12 | *1/2*	8 | *5/16*	16 | *5/8*	22 | *7/8*	20.000	10	*37E.137*	**37E.147**		

2

D mm | *inch*	A mm | *inch*	EBR mm | *inch*	DB mm | *inch*	H mm | *inch*	RPM max.	Pack.	**SIC 120/0.6** Art.-No.	**SIC 180/0.9** Art.-No.	**SIC 320/0.6** Art.-No.
50 | *2*	10 | *3/8*	8 | *5/16*	13 | *1/2*	12 | 1/2	20.000	10	**35E.846**	**35E.856**	**35E.876**
50 | *2*	10 | *3/8*	9 | *23/64*	16 | *5/8*	12 | 1/2	20.000	10	**35E.847**	**35E.857**	**35E.877**
63 | *2 1/2*	10 | *3/8*	8 | *5/16*	13 | *1/2*	18 | *5/8*	20.000	10	**36E.846**	**36E.856**	**36E.876**
63 | *2 1/2*	10 | *3/8*	9 | *23/64*	16 | *5/8*	18 | *5/8*	20.000	10	**36E.847**		**36E.877**

Wheel Brushes for the treatment of hard metal

3

D mm | *inch*	A mm | *inch*	EBR mm | *inch*	DB mm | *inch*	H mm | *inch*	RPM max.	Pack.	**Diamond K400** Art.-No.	**Diamond K600** Art.-No.
150 | *6*	5 | *13/64*	11 | *7/16*	20 | *3/4*	23 | *59/64*	3,000	1	*408.819.DB*	*408.812.DB*
150 | *6*	10 | *3/8*	16.5 | *21/32*	20 | *3/4*	23 | *59/64*	3,000	1	*408.829.DB*	*408.822.DB*
150 | *6*	15 | *5/8*	22 | *7/8*	20 | *3/4*	23 | *59/64*	3,000	1	*408.839.DB*	

4

D mm | *inch*	A mm | *inch*	EBR mm | *inch*	DB mm | *inch*	H mm | *inch*	RPM max.	Pack.	**AO 600** Art.-No.
100 | *4*	15 | *5/8*	12 | *1/2*	16 | *5/8*	27 | *1*	3,000	1	*320.061**
150 | *6*	15 | *5/8*	15 | *5/8*	20 | *3/4*	23 | *59/64*	3,000	1	*345.051**

* Filling with angular cut

Accessories

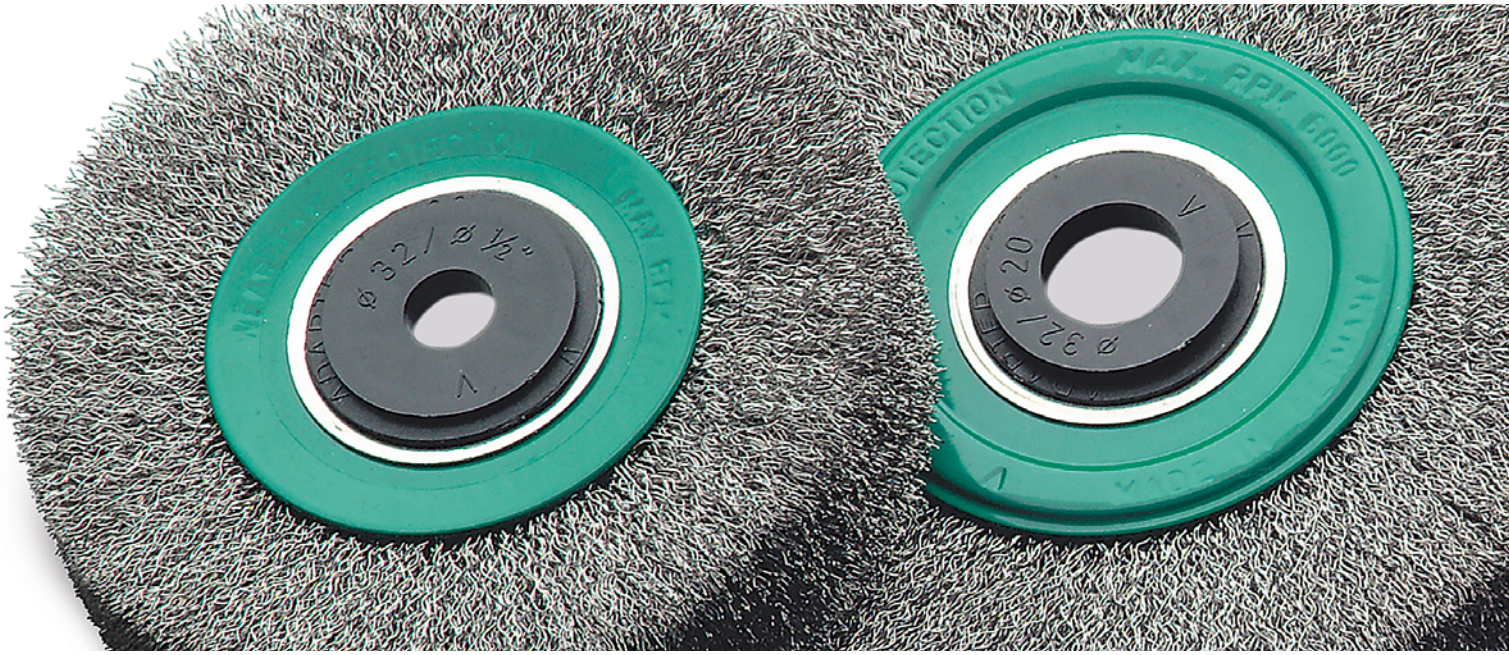

Adapters
With these adapters the bore can be reduced to the required size.
The wheel brushes are supplied with adapter sets which makes it possible to mount the brushes on all popular grinding machines.
The adapters have the following dimensions:

Set 1 / tube 30
30 / 1″ / 22,2 / 20 / 16 / 1/2″ / 12
Set 2 / tube 40:
40 / 32 / 1″ / 22,2 / 20 / 16 / 1/2″
Set 3 / tube 50:
50 / 32 / 1″ / 22,2 / 20 / 16 / 1/2″
Set 4 / tube 80 + 100:
brushes with metal discs, bore 50.8 and double keyway 7x13; plus adapter to bore 30. Further reduction possible with set 1.
Set 5 / tube 80 + 100:
brushes with metal discs, bore 50.8 and double keyway 7x13; plus adapter to bore 32. Further reduction possible with set 1.

A technical advice and safety information leaflet is included.

The practical adapter sets can also be ordered separately.

Single plastic reducing rings in many different dimensions can be supplied ex stock.

Drive Arbors
For use on drilling machines.

Metal Discs
Brushes with tube diameter 80 and 100 mm are supplied with our standard metal plates made of steel. Occasionally these metal plates are also required for brushes with smaller tubes. The metal plates on this page are therefore also suitable for the brushes on pages 30–33. Please indicate the required bore size on your order and note that normally two metal plates are required for one brush.

Adapter

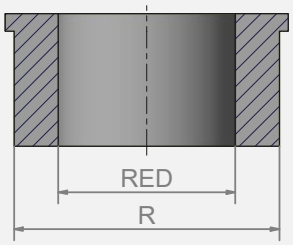

Drive Arbor Thread left

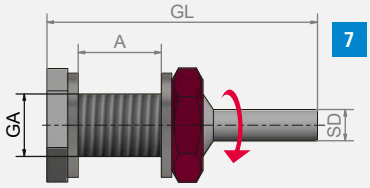

Drive Arbor Thread right

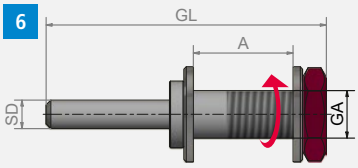

Item Nos. in bold are available ex stock.
Consider our minimum order value for *italic printed* article numbers (see page 178).

Adapter Sets

			R	RED	Pack.	Art.-No.
1	Set 1	Tube 30	30	1" - 22.2 - 20 - 16 - 1/2" - 12	2	**000.886.63**
2	Set 2	Tube 40	40	32 - 1" - 22.2 - 20 - 16 - 1/2"	2	**000.886.64**
3	Set 3	Tube 50	50	32 - 1" - 22.2 - 20 - 16 - 1/2"	2	**000.886.65**
4	Set 4	Tube 80/100	50.8	30 (further adapters with Set 1)	2	**000.886.68**
	Set 5	Tube 80/100	50.8	32	2	**000.888.32**

5 Single plastic reducing rings in many different dimensions can be supplied ex stock.

EAN

Drive Arbors

6

D mm | *inch*	GL mm | *inch*	GA	A	RPM max.	Pack.	Art.-No.
6 | *1/4*	60 | *2 3/8*	M 10 x 1,5	max. 18 mm	4,500	1	*000.041*
10 | *3/8*	60 | *2 3/8*	M 10 x 1,5	max. 18 mm	4,500	1	*000.042*
10 | *3/8*	75 | *3*	M 14 x 2,0	max. 29 mm	4,500	1	**000.043**

7

D mm | *inch*	GL mm | *inch*	GA	A	RPM max.	Pack.	Art.-No.
6 | *1/4*	40 | *1 3/8*	M 10 left	max. 15 mm	4,500	1	**000.044**
6 | *1/4*	50 | *2*	M 12 left	max. 20 mm	4,500	1	**000.045**

8 Metal Discs as Spare Part

	Pack.	Art.-No.
R 30	2	*000.631*
R 40	2	*000.641*
R 50	2	*000.651*
R 80	2	*000.661*
R100*	2	*000.671*

Bore must be indicated!
* On request with double keyset 12 x 7 (50.8 / 52.9 / 54.5)

LESSMANN®

THE GERMAN BRUSH COMPANY

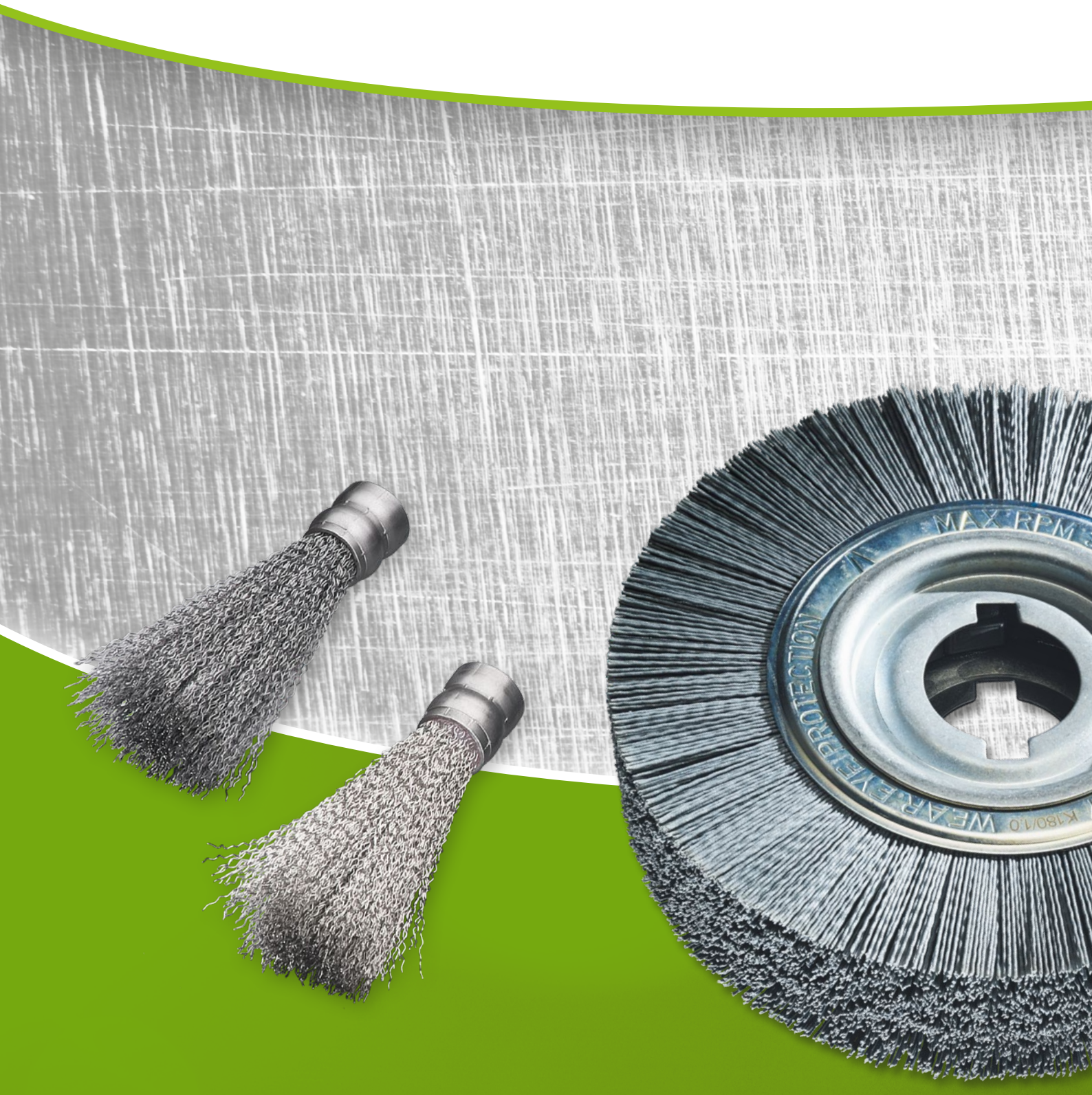

DEBURRING BRUSHES 02

Deburring Brushes

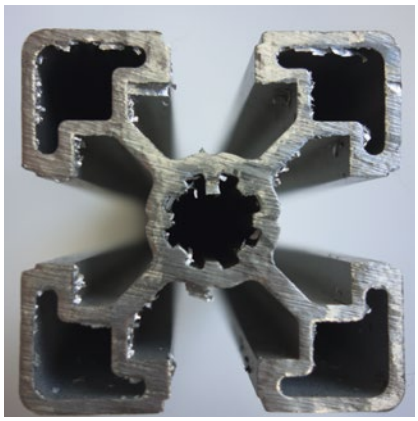

Part before brushing

Part after brushing

Deburring Brushes
Specially developed wheel brushes for deburring. These are suitable for all common deburring machines. Although they are heavier than other brushes because of their dense filling, we exclude any inbalance by evenly arranged filling material and the testing of every brush. Filled with high-quality wire, these brushes have a longer service life.

All brushes are with double keyway. Please indicate the required bore.

On the following pages you will find the standard measurements. Special measurements are available on request.

Deburring Brushes with Cord Wire STL / ROL
Deburring Brushes with cord wire are usually used for working on very hard materials. This wire construction gives the wires additional hold, hence the output of the brush is increased.

Encapsulated Deburring Brushes
Are ideal for an aggressive and very exact working. An early beak of the wires can be prevented. Therefore the brush has a longer life time and a better durability.

For more information about deburring please ask for our leaflet "Deburring with brushes".

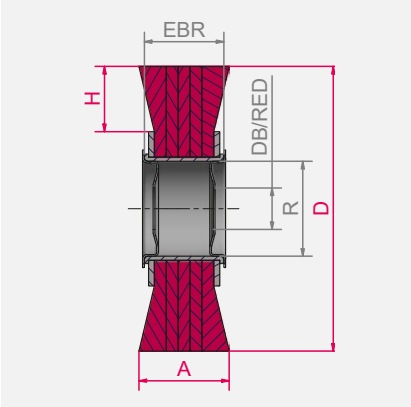

Item Nos. in bold are available ex stock.
Consider our minimum order value for *italic printed* article numbers (see page 178).

STH	= steel wire, high tensile, crimped
STM	= brass coated steel, crimped
STL	= cord wire, crimped

You can find our **Enquiry Forms** in the respective category under:
www.lessmann.com/index.php/en/content/view/full/61
or in the catalog from page 173

1 2

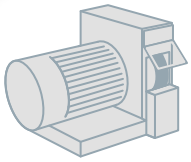

EAN

1 Deburring Brushes, Steel Wire

D	A	EBR	R	H	DB	RPM	Pack.	**STH 0.20** | *0.008"*	**STH 0.35** | *0.014"*	**STH 0.50** | *0.020"*
mm | *inch*	mm | *inch*		mm | *inch*	mm | *inch*	Stand.	max.		Art.-No.	Art.-No.	Art.-No.
250 | *10*	60 | *2 3/8*	58	100 | *4*	50 | *2*	50.8	3,600	1	**377.051**	**377.053**	**377.054**
250 | *10*	60 | *2 3/8*	58	100 | *4*	50 | *2*	52,9	3,600	1	*377.051.26*	*377.053.26*	*377.054.26*
250 | *10*	60 | *2 3/8*	58	100 | *4*	50 | *2*	54,5	3,600	1	*377.051.27*	*377.053.27*	*377.054.27*
250 | *10*	60 | *2 3/8*	55	100 | *4*	50 | *2*	100	3,600	1	*377.051.00*	*377.053.00*	*377.054.00*
250 | *10*	60 | *2 3/8*	53	100 | *4*	50 | *2*	50.8	3,600	1	*377.051.T1*	*377.053.T1*	*377.054.T1*
250 | *10*	60 | *2 3/8*	50	100 | *4*	50 | *2*	100	3,600	1	*377.051.TA*	**377.053.TA**	*377.054.TA*
250 | *10*	80 | *3 1/4*	79	100 | *4*	50 | *2*	50.8	3,600	1	*377.052*	*377.095*	*377.077*
250 | *10*	100 | *4*	99	100 | *4*	50 | *2*	50.8	3,600	1	*377.059*	*377.066*	*377.096*
300 | *12*	60 | *2 3/8*	49	100 | *4*	60 | *2 3/8*	50.8	3,000	1	*387.051*	**387.053**	*387.054*
300 | *12*	100 | *4*	93	100 | *4*	60 | *2 3/8*	50.8	3,000	1	available on demand	*387.055*	available on demand

EAN

2 Deburring Brushes, Cord Wire, Brass Coated Steel Wire

D	A	EBR	R	H	DB	RPM	Pack.	**STL 0.38** | *0.015"*	**STM 0.38** | *0.015"*
mm | *inch*	mm | *inch*		mm | *inch*	mm | *inch*	Stand.	max.		Art.-No.	Art.-No.
250 | *10*	60 | *2 3/8*	58	100 | *4*	50 | *2*	50.8	3,600	1	**377.043**	*377.063*
250 | *10*	60 | *2 3/8*	55	100 | *4*	50 | *2*	100	3,600	1	*377.043.00*	*377.063.00*
250 | *10*	60 | *2 3/8*	53	100 | *4*	50 | *2*	50.8	3,600	1	*377.043.T1*	*377.063.T1*
250 | *10*	60 | *2 3/8*	50	100 | *4*	50 | *2*	100	3,600	1	*377.043.TA*	*377.063.TA*
250 | *10*	80 | *3 1/4*	79	100 | *4*	50 | *2*	50.8	3,600	1	*377.045*	available on demand
250 | *10*	100 | *4*	99	100 | *4*	50 | *2*	50.8	3,600	1	*377.048*	available on demand
250 | *10*	100 | *4*	96	100 | *4*	50 | *2*	100	3,600	1	*377.048.00*	

All brushes with metal disc and bore 50.8 mm and double keyway 13 x 7 mm!
Further standard bores: 52.9 / 54.5 mm; d min/max: 30 mm ≤ d ≤ R; Deburring Brushes also available with tube 120.

Deburring Brushes

1 2 3 4

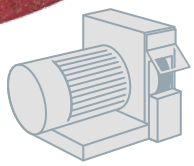

EAN

Deburring Brushes, Stainless Steel Wire, Cord Wire

								1			2
D	A	EBR	R	H	DB	RPM	Pack.	**ROH 0.20** | *0.008"*	**ROH 0.35** | *0.014"*	**ROH 0.50** | *0.020"*	**ROL 0.35** | *0.014"*
mm | *inch*	mm | *inch*				Stand.	max.		Art.-No.	Art.-No.	Art.-No.	Art.-No.
250 | *10*	60 | *2 3/8*	58	100	50	50.8	3,600	1	**377.044**	**377.089**	*377.094*	**377.707**
250 | *10*	60 | *2 3/8*	58	100	50	52,9	3,600	1	*377.044.26*	*377.089.26*	*377.094.26*	*377.707.26*
250 | *10*	60 | *2 3/8*	58	100	50	54,5	3,600	1	*377.044.27*	*377.089.27*	*377.094.27*	*377.707.27*
250 | *10*	60 | *2 3/8*	55	100	50	100	3,600	1	*377.044.00*	*377.089.00*	*377.094.00*	*377.707.00*
250 | *10*	60 | *2 3/8*	53	100	50	50.8	3,600	1	*377.044.T1*	*377.089.T1*	*377.094.T1*	*377.707.T1*
250 | *10*	60 | *2 3/8*	50	100	50	100	3,600	1	*377.044.TA*	*377.089.TA*	*377.094.TA*	*377.707.TA*
250 | *10*	80 | *3 1/4*	79	100	50	50.8	3,600	1	*377.047*	*377.090*	*377.097*	available on demand
250 | *10*	100 | *4*	99	100	50	50.8	3,600	1	*377.049*	*377.093*	*377.099*	available on demand
300 | *12*	100 | *4*	95	100	60	50.8	3,000	1	available on demand	available on demand	available on demand	available on demand

All brushes with metal disc and bore 50.8 mm and double keyway 13 x 7 mm!
Further standard bores: 52.9 / 54.5 mm; d min/max: 30 mm ≤ d ≤ R; Deburring Brushes also available with tube 120.

EAN

Deburring Brushes, encapsulated

						3		4	
D	A	R	H	DB	Pack.	**STH 0.20** | *0.008"*	**STH 0.35** | *0.014"*	**ROH 0.20** | *0.008"*	**ROH 0.35** | *0.014"*
mm | *inch*	mm | *inch*			Stand.		Art.-No.	Art.-No.	Art.-No.	Art.-No.
250 | *10*	13 | *1/2*	100	58	33	1	*370.241.KG*	**370.271.KG**	**370.441.KG**	**370.471.KG**
250 | *10*	20 | *3/4*	100	57	33	1	*370.242.KG*	*370.272.KG*	**370.442.KG**	**370.472.KG**

Stainless Steel Brushes
LESSMANN brushes with stainless steel wire have green site plates.
More information for brush applications on stainless materials you will find at www.lessmann.com

2 1

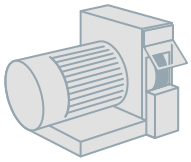

EAN **1 Deburring Brushes, Silicon Carbide Bristles**

D mm | *inch*	A mm | *inch*	EBR	R mm | *inch*	H mm | *inch*	DB Stand.	RPM max.	Pack.	**SIC 80/1.2** Art.-No.	**SIC 120/1.1** Art.-No.	**SIC 180/1.0** Art.-No.	**SIC 320/0.6** Art.-No.
250 | *10*	60 | *2 3/8*	58	100 | *4*	50 | *2*	50.8	3,600	1	*377.824*	**377.835**	**377.854**	*377.875*
250 | *10*	60 | *2 3/8*	55	100 | *4*	50 | *2*	100	3,600	1	*377.824.00*	*377.835.00*	*377.854.00*	*377.875.00*
250 | *10*	50 | *2*	53	100 | *4*	50 | *2*	50.8	3,600	1	*377.824.T1*	*377.835.T1*	*377.854.T1*	*377.875.T1*
250 | *10*	50 | *2*	50	100 | *4*	50 | *2*	100	3,600	1	*377.824.TA*	*377.835.TA*	*377.854.TA*	*377.875.TA*
250 | *10*	80 | *3 1/4*	79	100 | *4*	50 | *2*	50.8	3,600	1	available on demand	*377.837*	available on demand	available on demand
250 | *10*	100 | *4*	99	100 | *4*	50 | *2*	50.8	3,600	1	available on demand	*377.839*	available on demand	available on demand
300 | *12*	60 | *2 3/8*	55	100 | *4*	60 | *2 3/8*	50.8	3,000	1	*387.824*	available on demand	available on demand	available on demand
300 | *12*	100 | *4*	95	100 | *4*	60 | *2 3/8*	50.8	3,000	1	available on demand	available on demand	available on demand	available on demand

EAN **2 Deburring Brushes, mixed filament**

D mm | *inch*	A mm | *inch*	EBR	R mm | *inch*	H mm | *inch*	DB Stand.	RPM max.	Pack.	**ROF 0.20 - SIC 120** Mixed filament with mixing proportion 1:1 Art.-No.
250 | *10*	60 | *2 3/8*	58	100 | *4*	50 | *2*	50.8	3,600	1	*377.091*
250 | *10*	60 | *2 3/8*	55	100 | *4*	50 | *2*	100	3,600	1	*377.091.00*

All brushes with metal disc and bore 50.8 mm and double keyway 13 x 7 mm!
Further standard bores: 52.9 / 54.5 mm; d min/max: 30 mm ≤ d ≤ R; Deburring Brushes also available with tube 120.

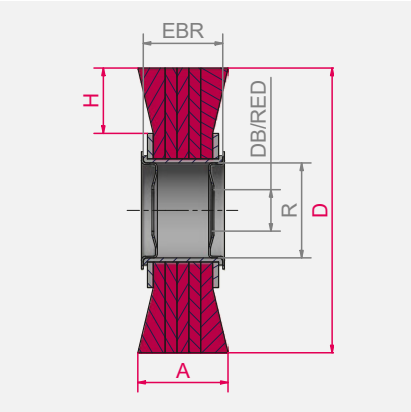

Item Nos. in bold are available ex stock.
Consider our minimum order value for *italic printed* article numbers (see page 178).

STH = steel wire, high tensile, crimped
ROL = stainless steel, cord wire
ROH = stainless steel wire, high tensile, crimped
ROF = stainless steel wire, crimped
SIC = silicon carbide bristles

Roller Brushes

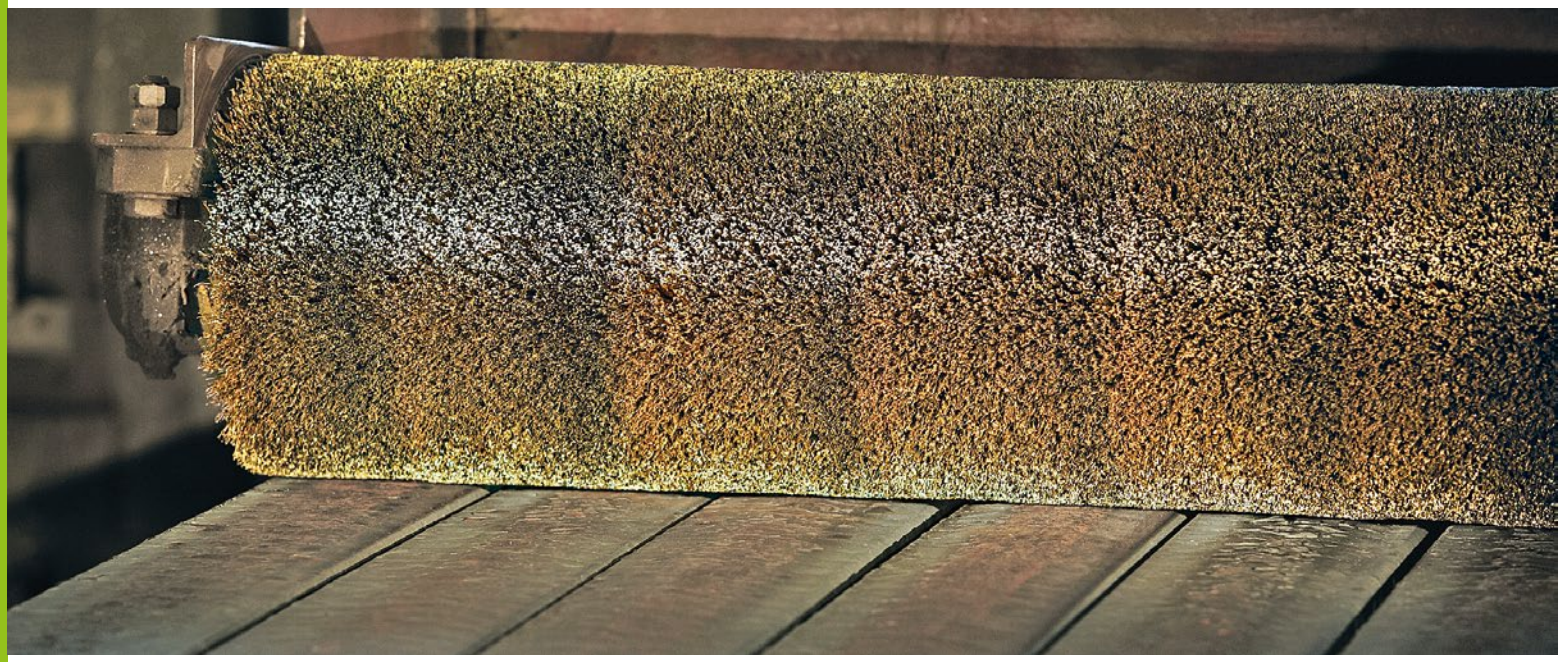

Roller Brushes
Roller Brushes for the use in deburring machines. For Deburring e.g. cutting edges of tubes.
As filling material you can choose from steel and stainless steel wire, brass coated steel wire or cord wire. These brushes feature with their dense filling.

Roller Brushes
Deburring brushes are available with
D = 250 – 400 mm and
A = 55 – 700 mm

In your inquiry please indicate measure D, A and the bore e.g. 50.8 mm, 52.9 mm or 54.5 mm with double keyway 13 x 7 mm. Other bores up to 120 mm are available on demand.

Moreover we offer with our welded metal plate special collets for the roller brushes. Bores and keyways will be produced customized.

Note: Due to our advanced manufacturing technology it is possible to produce balanced roller brushes without balancing weights. Hence the brush has a steady run throughout its whole lifetime.

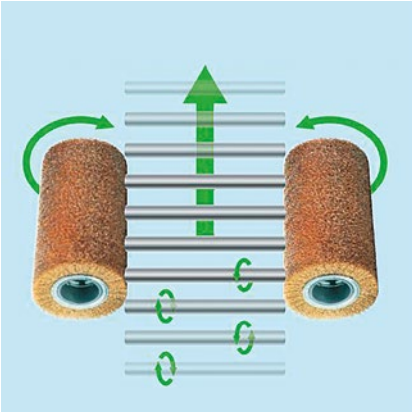

Function chart of a deburring machine with roller brushes

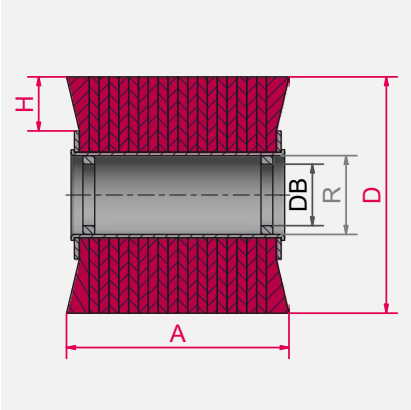

Item Nos. in bold are available ex stock.
Consider our minimum order value for *italic printed* article numbers (see page 178).

STH	= steel wire, high tensile, straight
STL	= cord wire, crimped
ROH	= stainless steel wire, high tensile, crimped
SIC	= silicon carbide bristles

Strip brushes for deburring machines you find on pages 158 et seq.

Roller Brushes, Steel Wire, Cord Wire

D mm | *inch*	A mm | *inch*	R mm | *inch*	H mm | *inch*	DB Stand.	RPM max.	Pack.	**STH 0.20** | *0.008"* Art.-No.	**STH 0.35** | *0.014"* Art.-No.	**STH 0.50** | *0.020"* Art.-No.	**STL 0.38** | *0.015"* Art.-No.
250 | *10*	300 | *12*	100 | *4*	50 | *2*	100	3,600	1	*377.240.30*	*377.270.30*	*377.290.30*	*377.780.30*
250 | *10*	460 | *18*	100 | *4*	50 | *2*	100	3,600	1	*377.240.46*	*377.270.46*	*377.290.46*	*377.780.46*
250 | *10*	600 | *24*	100 | *4*	50 | *2*	100	3,600	1	*377.240.60*	*377.270.60*	*377.290.60*	*377.780.60*
300 | *12*	460 | *18*	100 | *4*	60 | *2 3/8*	100	3,000	1	*387.240.46*	*387.270.46*	*387.290.46*	*387.780.46*
300 | *12*	450 | *17 7/8*	120 | *4 3/4*	50 | *2*	120	3,000	1		*388.270.45*		
300 | *12*	460 | *18*	120 | *4 3/4*	50 | *2*	120	3,000	1	*388.240.46*	*388.270.46*	*388.290.46*	*388.780.46*
300 | *12*	600 | *24*	120 | *4 3/4*	50 | *2*	120	3,000	1	*388.240.60*	*388.270.60*	*388.290.60*	*388.780.60*

Roller Brushes, Stainless Steel, Abrasive Bristles

D mm | *inch*	A mm | *inch*	R mm | *inch*	H mm | *inch*	DB Stand.	RPM max.	Pack.	**ROH 0.20** | *0.008"* Art.-No.	**ROH 0.35** | *0.014"* Art.-No.	**ROH 0.50** | *0.020"* Art.-No.	**SIC 120 / 1.1** Art.-No.
250 | *10*	300 | *12*	100 | *4*	50 | *2*	100	3,600	1	*377.440.30*	*377.470.30*	*377.490.30*	*377.830.30*
250 | *10*	460 | *18*	100 | *4*	50 | *2*	100	3,600	1	*377.440.46*	*377.470.46*	*377.490.46*	*377.830.46*
250 | *10*	600 | *24*	100 | *4*	50 | *2*	100	3,600	1	*377.440.60*	*377.470.60*	*377.490.60*	*377.830.60*
300 | *12*	460 | *18*	100 | *4*	60 | *2 3/8*	100	3,000	1	*387.440.46*	*387.470.46*	*387.490.46*	*387.830.46*
300 | *12*	460 | *18*	120 | *4 3/4*	50 | *2*	120	3,000	1	*388.440.46*	*388.470.46*	*388.490.46*	*388.830.46*
300 | *12*	600 | *24*	120 | *4 3/4*	50 | *2*	120	3,000	1	*388.440.60*	*388.470.60*	*388.490.60*	*388.830.60*

Other measurements and filling materials as well as collets in special measurements are available on request.

Deburring End Brushes

Deburring End Brushes
These brushes are perfect for deburring tubes, profiles or even plane surfaces. Deburring end brushes are used in a set of 8, 16 or 24 single end brushes integrated in one deburring device.

The metal bush fits all standard collets.

Stainless Steel
Information on working on stainless steel material you find at. www.lessmann.com

Schematic diagram of a deburring device for deburring end brushes

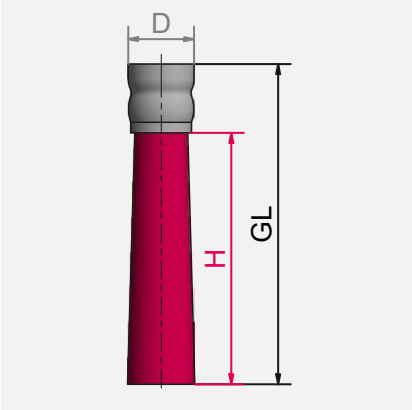

Item Nos. in bold are available ex stock.
Consider our minimum order value for *italic printed* article numbers (see page 178).

STH	= steel wire, high tensile, straight
STL	= cord wire, crimped
ROH	= stainless steel wire, high tensile, crimped
SIC	= silicon carbide bristles

1 Deburring End Brushes, Steel Wire

D mm | *inch*	GL mm | *inch*	H mm | *inch*	Pack.	**STH 0.20** | *0.008"* Art.-No.	**STH 0.35** | *0.014"* Art.-No.	**STH 0.50** | *0.020"* Art.-No.
25 | *1*	120 | *4 3/4*	95 | *3 1/2*	16	**048.241**	**048.271**	**048.291**

2 Deburring End Brushes, CordWire

D mm | *inch*	GL mm | *inch*	H mm | *inch*	Pack.	**STL 0.35** | *0.014"* Art.-No.
25 | *1*	120 | *4 3/4*	95 | *3 1/2*	16	**048.701**

3 Deburring End Brushes, Stainless Steel Wire

D mm | *inch*	GL mm | *inch*	H mm | *inch*	Pack.	**ROH 0.20** | *0.008"* Art.-No.	**ROH 0.35** | *0.014"* Art.-No.	**ROH 0.50** | *0.020"* Art.-No.
25 | *1*	120 | *4 3/4*	95 | *3 1/2*	16	**048.441**	*048.471*	*048.491*

Deburring End Brushes, Silicon Carbide Bristles, mixed wire

				4			5
D mm | *inch*	GL mm | *inch*	H mm | *inch*	Pack.	**SIC 80 / 1.2** Art.-No.	**SIC 120 / 1.1** Art.-No.	**SIC 180 / 1.0** Art.-No.	**SIC 120 / 1.1 - ROH 0.20** Art.-No.
25 | *1*	120 | *4 3/4*	95 | *3 1/2*	16	*048.821*	**048.841**	*048.851*	**048.901***
25 | *1*	120 | *4 3/4*	95 | *3 1/2*	16				**048.941****

* Mixing proportion 1:1 | ** Mixing proportion 2:1

LESSMANN®

THE GERMAN BRUSH COMPANY

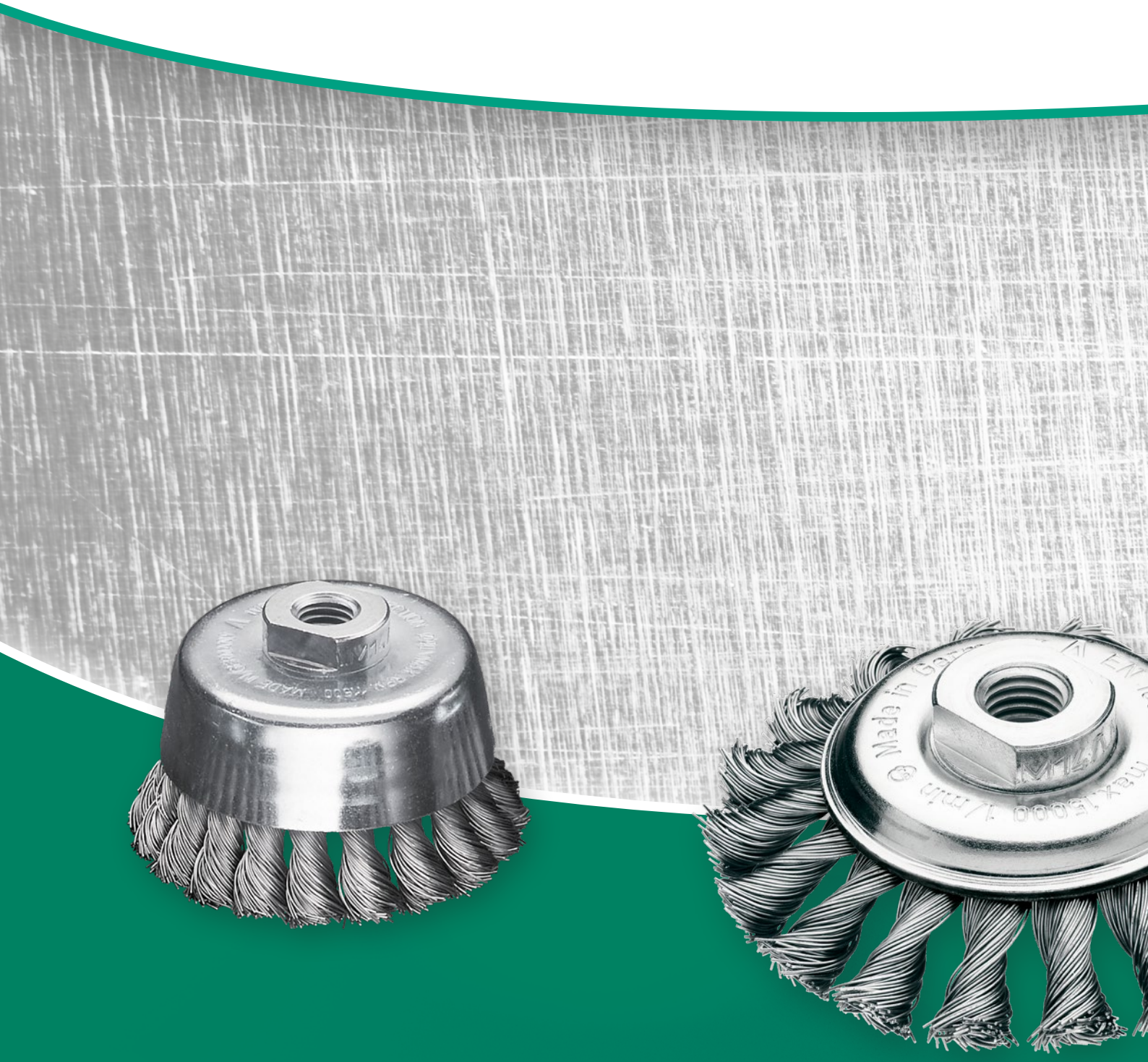

CUP AND BEVEL BRUSHES

03

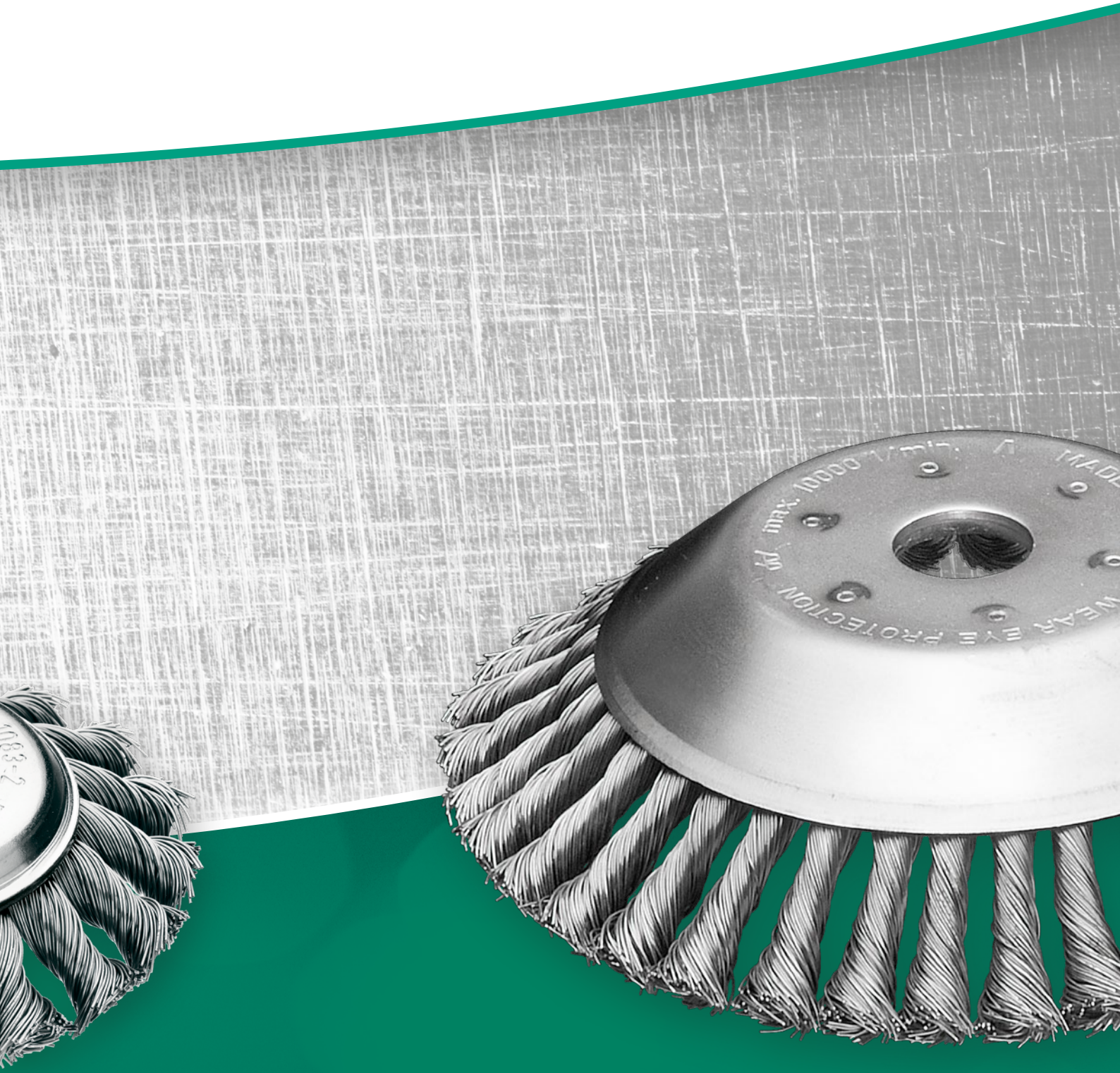

Cup Brushes

Cup Brushes
Knot cup brushes are for heavy duty use: for the preparing of metal surfaces before painting, the removal of slag, rust, scale or concrete waste.
The brushes diameter 80/100/125 mm (Art. No. 484/486/487) have a **bridle** fitted for stability. The bridle can be removed after wear of the wire exposing a further 20 mm of useable wire!

User tip: We recommend the use of our brush with diameter 90 mm for small angle grinders. Compared to the common brush with diameter 65 mm this model has 50 % more wire and it is really something special in the brush market!

Cup brushes with narrow knots
Our new range of cup brushes with narrower six millimetre knots is optimized for usage on flat surfaces, weld seams and firmly attached dirt:

- Improved removal rate, therefore more efficient working
- Less imbalance, therefore quieter working
- Long lifetime
- Attractive price-performance ratio

Knot Cup Brushes with extra long filling
For the use on large areas and for a flexible cleaning and derusting of e.g. shipyards. For a use in angle grinders. Easy working also in areas which are hard to reach.

Cup Brushes, left-right knotted
Left-right knotted cup brushes usually are more aggressive, hence they are often used for heavy brushing operations.
Besides the knots open less, therefore they are ideal for the treatment of edges.

Cup Brushes
Cup brushes with crimped wire are ideal for working on large surfaces with angle grinders. They can also be used for the removal of rust, paint, dirt or scale and for polishing.

Special Designs
The cup brushes can be delivered with different filling materials according to your requirements e.g. brushes with brass cups and brass wire for non-sparkling applications.

For promoting sales all standard wheel brushes are packed individually for self display. They are also available in bulk.

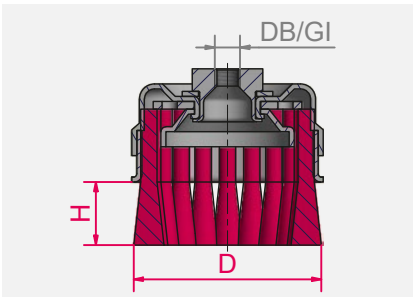

Z = number of knots

You can find our **tutorials** here:
www.lessmann.com/index.php/en/content/view/full/711

You can find our **Enquiry Forms** in the respective category under:
www.lessmann.com/index.php/en/content/view/full/61 or in the catalog from page 173

Chunky packaging
Many articles you receive as standard in handy covering boxes with 10 pcs.

Item Nos. in bold are available ex stock.
Consider our minimum order value for *italic printed* article numbers (see page 178).

STH	= steel wire, high tensile, straight
STM	= brass coated steel, straight
MES	= brass wire
BRO	= bronze wire
ROH	= stainless steel wire, high tensile, straight

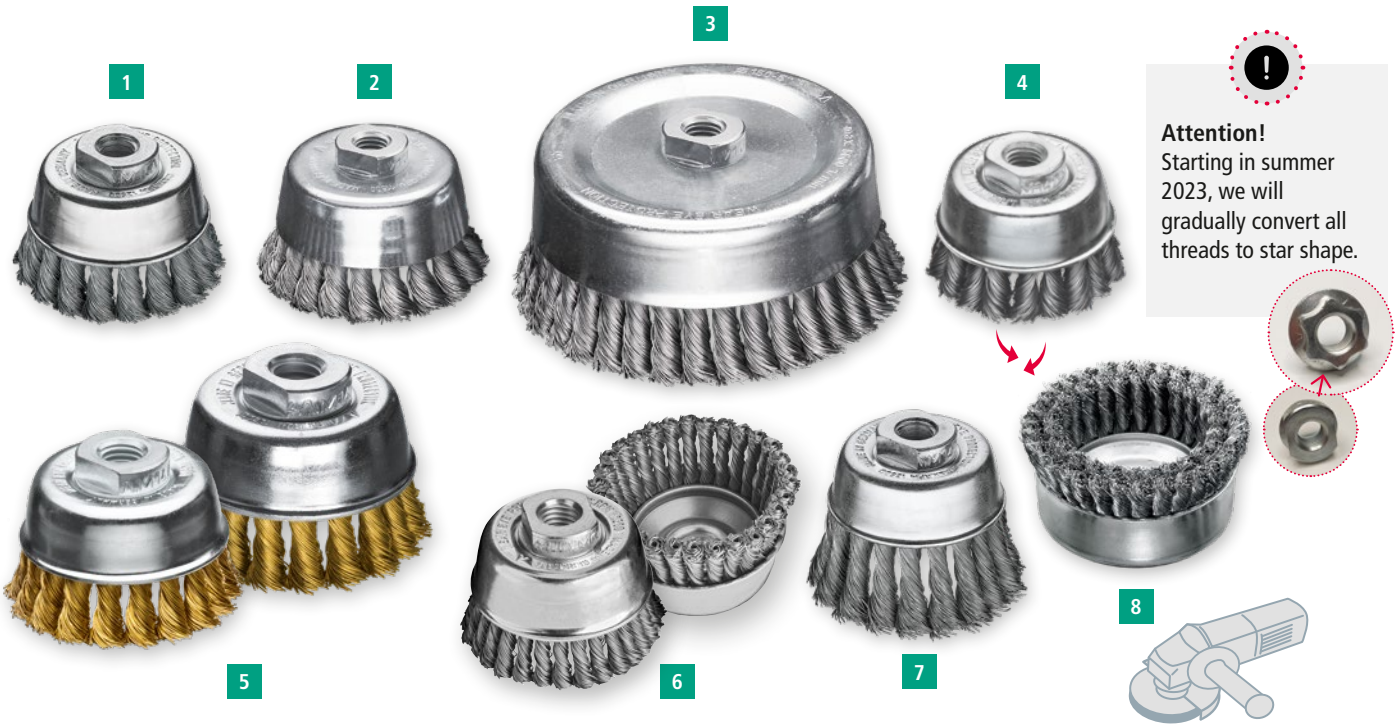

Attention!
Starting in summer 2023, we will gradually convert all threads to star shape.

Knot Cup Brushes without Bridle, 1 Row, Steel Wire, Brass coated Steel Wire

	D mm | *inch*	Gl	H mm | *inch*	Z	RPM max.	Pack.	STH 0.35 | *0.014"* Art.-No.	STH 0.50 | *0.020"* Art.-No.	STH 0.80 | *0.031"* Art.-No.	5 STM 0.35 | *0.014"* Art.-No.	5 STM 0.50 | *0.020"* Art.-No.
1	65 | *2 1/2*	M 10 x 1.5	20 | *3/4*	18	12,500	1	**482.114***	**482.214***	available on demand		
1	65 | *2 1/2*	M 14 x 2.0	20 | *3/4*	18	12,500	1	**482.117***	**482.217***	**482.317***	**482.117.SM***	**482.217.SM***
1	75 | *3*	M 14 x 2.0	20 | *3/4*	20	12,500	1	**483.117***	**483.217***	*483.317*		
2	90 | *3 1/2*	M 14 x 2.0	22 | *7/8*	20	11,500	1	*485.137**	**485.237***	*485.337*		**485.237.SM***
3	100 | *4*	M 14 x 2.0	25 | *1*	26	9,000	1	available on demand	**486.237***	available on demand		
3	125 | *5*	M 14 x 2.0	25 | *1*	32	7,000	1	available on demand	**487.237**	available on demand		
3	150 | *6*	M 14 x 2.0	30 | *1 1/4*	36	6,600	1	available on demand	**488.237**	available on demand		
3	150 | *6*	5/8"-11 UNC	30 | *1 1/4*	36	6,600	1	available on demand	*488.238*	available on demand		
4	65 | *2 1/2*	M 14 x 2.0	20 | *3/4*	18	12,500	1	available on demand	**482.217.WZ***			

6 Cup brushes with narrow knots

D mm | *inch*	Gl	H mm | *inch*	Z	RPM max.	Pack.	STH 0,50 | *0.020"* Art.-No.
65 | *2 1/2*	M14 x 2,0	20 | *3/4*	30	12,500	1	**482.207**
65 | *2 1/2*	5/8" – 11 UNC	20 | *3/4*	30	12,500	1	*482.208*
65 | *2 1/2*	M10 x 1,5	20 | *3/4*	30	12,500	1	*482.204*

7 Knot Cup Brushes, without Bridle, 1 Row, Steel Wire, with extra long filling

D mm | *inch*	Gl	H mm | *inch*	Z	RPM max.	Pack.	STH 0.35 | *0.014"* Art.-No.	STH 0.50 | *0.020"* Art.-No.
80 | *3 1/4*	M 14 x 2.0	33 | *1 1/4*	18	12,500	25	**480.117**	*480.217*

8 Knot Cup Brushes without Bridle, 2 Rows, Steel Wire

D mm | *inch*	Gl	H mm | *inch*	Z	RPM max.	Pack.	STH 0.35 | *0.014"* Art.-No.	STH 0.50 | *0.020"* Art.-No.	STH 0.80 | *0.031"* Art.-No.
100 | *4*	5/8" - 11 UNC	25 | *1*	26+20	9,000	1	*486.148*	*486.248*	*486.348*
125 | *5*	5/8" - 11 UNC	25 | *1*	32+26	7,000	1	available on demand	*487.248*	available on demand
150 | *6*	5/8" - 11 UNC	25 | *1*	36+32	6,600	1	available on demand	*488.248*	available on demand

* Packed 10 pieces per carton

Cup Brushes

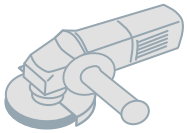

EAN

Knot Cup Brushes with Bridle, 1 Row, Steel Wire

D mm | *inch*	DB/GI mm | *inch*	H mm | *inch*	H_1 mm | *inch*	Z	RPM max.	Pack.	1 **STH 0.35** | *0.014"* Art.-No.	**STH 0.50** | *0.020"* Art.-No.	**STH 0.80** | *0.031"* Art.-No.
80 | *3 1/4*	22.2 | *7/8*	25 | *1*	15 | *5/8*	20	9,000	1			**484.311***
80 | *3 1/4*	M 14 x 2.0	25 | *1*	15 | *5/8*	20	9,000	1	**484.117***	**484.217***	**484.317***
80 | *3 1/4*	5/8" - 11 UNC	25 | *1*	15 | *5/8*	20	9,000	1	*484.118*	**484.218**	*484.318*
100 | *4*	22.2 | *7/8*	23 | *7/8*	12 | *1/2*	26	9,000	1	**486.111**	**486.211***	**486.311***
100 | *4*	M 14 x 2.0	23 | *7/8*	12 | *1/2*	26	9,000	1	**486.117***	**486.217***	**486.317***
100 | *4*	5/8" - 11 UNC	23 | *7/8*	12 | *1/2*	26	9,000	1	*486.118*	**486.218***	*486.318**
125 | *5*	22.2 | *7/8*	23 | *7/8*	15 | *5/8*	32	6,600	1			*487.311***
125 | *5*	M 14 x 2.0	23 | *7/8*	15 | *5/8*	32	6,600	1	**487.117**	**487.217**	**487.317**
125 | *5*	5/8" - 11 UNC	23 | *7/8*	15 | *5/8*	32	6,600	1	*487.118*	**487.218**	*487.318*

EAN

Knot Cup Brushes with Bridle, 1 Row, bronze wire, fittings brass

D mm | *inch*	DB/GI mm | *inch*	H mm | *inch*	H_1 mm | *inch*	Z	RPM max.	Pack.	2 **BRO 0.50** | *0.020"* Art.-No.
125 | *5*	16 | *5/8*	23 | *7/8*	15 | *5/8*	32	4,000	1	*487.011.MS***

After removing the bridle there is the following further trimming length (see measure H1).

* Packed 10 pieces per carton.
** This brush doesn't work with angle grinders.

Attention!
Starting in summer 2023, we will gradually convert all threads to star shape.

Six wrench flats instead of only two give you more flexibility when working.

Item Nos. in bold are available ex stock.
Consider our minimum order value for *italic printed* article numbers (see page 178).

STH = steel wire, high tensile, straight
ROH = stainless steel wire, high tensile, straight
ROH = premium quality stainless steel wire
BRO = bronze wire

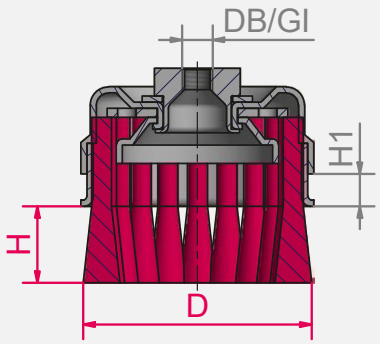

Z = number of knots

EAN

Knot Cup Brushes without Bridle, 1 Row, Stainless Steel Wire

	D mm | *inch*	GI	H mm | *inch*	Z	RPM max.	Pack.	**ROH 0.35** | *0.014"* Art.-No.	**ROH 0.50** | *0.020"* Art.-No.	**RO4 0.50** | *0.020"* Art.-No.
1	65 | *2 1/2*	M 10 x 1.5	20 | *3/4*	18	12,500	1	*482.714*	*482.814**	
1	65 | *2 1/2*	M 14 x 2.0	20 | *3/4*	18	12,500	1	**482.717***	**482.817***	**482.517***
1	75 | *3*	M 14 x 2.0	20 | *3/4*	20	12,500	1	available on demand	**483.817***	
1	80 | *3 1/4*	M 14 x 2.0	33 | *1 1/4*	18	15,500	25	**480.717**	available on demand	
2	65 | *2 1/2*	M 14 x 2.0	20 | *3/4*	18	12,500	1	available on demand	**482.817.WZ***	

EAN

3 Knot Cup Brushes with Bridle, 1 Row, Stainless Steel Wire

D mm | *inch*	GI mm | *inch*	H mm | *inch*	H_1 mm | *inch*	Z	RPM max.	Pack.	**ROH 0.35** | *0.014"* Art.-No.	**ROH 0.50** | *0.020"* Art.-No.
80 | *3 1/4*	M 14 x 2.0	25 | *1*	15 | *5/8*	20	9,000	1	**484.717**	**484.817***
80 | *3 1/4*	5/8" - 11 UNC	25 | *1*	15 | *5/8*	20	9,000	1	*484.718*	*484.818*
100 | *4*	M 14 x 2.0	23 | *7/8*	12 | *1/2*	26	9,000	1	**486.717***	**486.817***
100 | *4*	5/8" - 11 UNC	23 | *7/8*	12 | *1/2*	26	9,000	1	*486.718*	*486.818*
125 | *5*	M 14 x 2.0	23 | *7/8*	15 | *5/8*	32	6,600	1	available on demand	**487.817**

* Packed 10 pieces per carton

EAN

4 Cup brushes with narrow knots, Stainless Steel Wire

D mm | *inch*	GI	H mm | *inch*	Z	RPM max.	Pack.	**ROH 0.50** | *0.020"* Art.-No.
65 | *2 1/2*	M14 x 2,0	20 | *3/4*	30	12,500	1	**482.807**
65 | *2 1/2*	5/8" – 11 UNC	20 | *3/4*	30	12,500	1	482.808

EAN

Knot Cup Brushes without Bridle, 1 Row, brass wire, bronze wire

D mm | *inch*	GI	H mm | *inch*	Z	RPM max.	Pack.	5 **MES 0.35** | *0.014"* Art.-No.	5 **MES 0.50** | *0.020"* Art.-No.	6 **BRO 0.50** | *0.020"* Art.-No.
65 | *2 9/16*	M 14 x 2.0	20 | *51/64*	18	12,500	1	**482.017**	**482.027**	**482.057**

Stainless Steel Brushes

LESSMANN brushes with stainless steel wire have green cups. More information for brush applications on stainless materials you will find at www.lessmann.com

Cup Brushes

Cup Brushes with Crimped Wire

D	DB/GI	H	RPM	Pack.	1			2		3
					STA 0.20 | *0.008"*	STA 0.35 | *0.014"*	STA 0.50 | *0.020"*	ROF 0.35|*0.012"*	RO4 0.30|*0.012"*	MES 0.30 | *0.012"*
mm | *inch*	mm | *inch*		max.		Art.-No.	Art.-No.	Art.-No.	Art.-No.	Art.-No.	Art.-No.
65 | *2 3/8*	M 10 x 1,5	20	12,000	1		**421.164**[1]		*421.364*		*421.564*
65 | *2 3/8*	M 14 x 2.0	20	12,000	1	**421.147**	**421.167**[1]	**421.197**	**421.367**[1]	**421.467**[1]	**421.567**[1]
75 | *3*	M 14 x 2.0	22	12,500	1		**423.167**[1]	on demand	**423.367**[1/2]		on demand
75 | *3*	5/8" - 11 UNC	22	12,500	1		**423.168**[1]	on demand	**423.368**[2]		on demand
80 | *3 1/4*	22.2 | *7/8*	25	8,500	1		**424.171**[1]	on demand	*424.361*		on demand
80 | *3 1/4*	M 14 x 2.0	25	8,500	1	**424.147**	**424.177**[1]	**424.197**	**424.367**[1]		**424.567**
80 | *3 1/4*	5/8" - 11 UNC	25	8,500	1		*424.178*	*424.198*	*424.368*		on demand
100 | *4*	22.2 | *7/8*	30	9,000	1		**426.171**[1]		*426.361*		
100 | *4*	M 14 x 2.0	30	9,000	1	**426.147**[1]	**426.177**[1]	**426.197**[1]	**426.367**[1]		**426.567**
100 | *4*	5/8" - 11 UNC	30	9,000	1		**426.178**[1]	*426.198*	*426.368*		*426.568*
125 | *5*	22.2 | *7/8*	30	8,000	1		**427.171**[3]	on demand	on demand		on demand
125 | *5*	M 14 x 2.0	30	8,000	1	**427.147**	**427.177**	**427.297**	**427.367**[1]		**427.567**[1]
125 | *5*	5/8" - 11 UNC	30	8,000	1		**427.178**	*427.298*			
150 | *6*	22.2 | *7/8*	40	6,500	1		**429.171**				
150 | *6*	M 14 x 2.0	40	6,500	1		**429.177**	*429.197*	*429.367*		
150 | *6*	5/8" - 11 UNC	40	6,500	1		*429.178*	*429.198*			

Cup Brushes, Cord Wire, Brass Coated Steel Wire, Silicon Carbide Bristles

D	DB/GI	H	RPM	Pack.			4	
					STL 0.35 | *0.014"*	STM 0.30 | *0.012"*	SIC 80/1.2	SIC 180/0.9
mm | *inch*			max.		Art.-No.	Art.-No.	Art.-No.	Art.-No.
65 | *2 3/8*	M 14 x 2.0	20	12,000	1		**421.767**	**421.827**	*421.857*
100 | *4*	22.2 | *7/8*	30	9,000	1	*426.701*			
100 | *4*	M 14 x 2.0	30	9,000	1		**426.767**		

[1] Packed 10 pieces per carton.
[2] Version with filament ROF 0.35!
[3] This brush doesn't work with angle grinders.

1

2

3

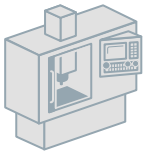

EAN

Cup Brushes, Straight Filament

	D mm | *inch*	DB/GI mm | *inch*	H	RPM max.	Pack.	**STH 0.35** | *0.014"* Art.-No.	**STM 0.35** | *0.014"* Art.-No.	**STL 0.35** Art.-No.	**SIC 80/1.2** Art.-No.	**SIC 180/1.0** Art.-No.
1	90 | *3 1/2*	M 14	25	9,000	1				**446.827***	***446.857****
	90 | *3 1/2*	22.2 | *7/8*	25	9,000	1				available on demand	*446.851***
3	100 | *4*	M 14	30	9,000	1	*446.277**	*446.777**			
	100 | *4*	22.2 | *7/8*	30	9,000	1	*446.271**	*446.771**	**446.701***		
2	110 | *4 1/2*	M 14	30	7,000	1				**447.827***	**447.857***
3	125 | *5*	M 14	30	5,000	1	**447.277***	available on demand	*447.707*		

1 with bridle | * Packed 10 pieces per carton
** This brush doesn't work with angle grinders.

Cup Brushes with Straight Wire

They are used for deburring surfaces, mostly in machining centers. The brushes are available with steel wire, stainless steel wire, abrasive nylon or any other filament. Due to the straight cup the filament of the brush is less flaring out and more cone points of the bristles work on the surface. Please contact us for more information!

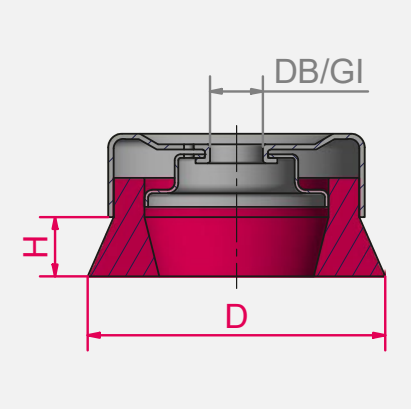

Item Nos. in bold are available ex stock.
Consider our minimum order value for *italic printed* article numbers (see page 178).

STA	= steel wire, crimped
STH	= steel wire, high tensile, straight
STM	= brass coated steel, crimped
STL	= cord wire, crimped
ROH	= stainless steel wire, high tensile, crimped
RO4	= premium quality stainless steel wire
MES	= brass wire, crimped
SIC	= silicon carbide bristles

Attention!
Starting in summer 2023, we will gradually convert all threads to star shape.

Six wrench flats instead of only two give you more flexibility when working.

Bevel Brushes

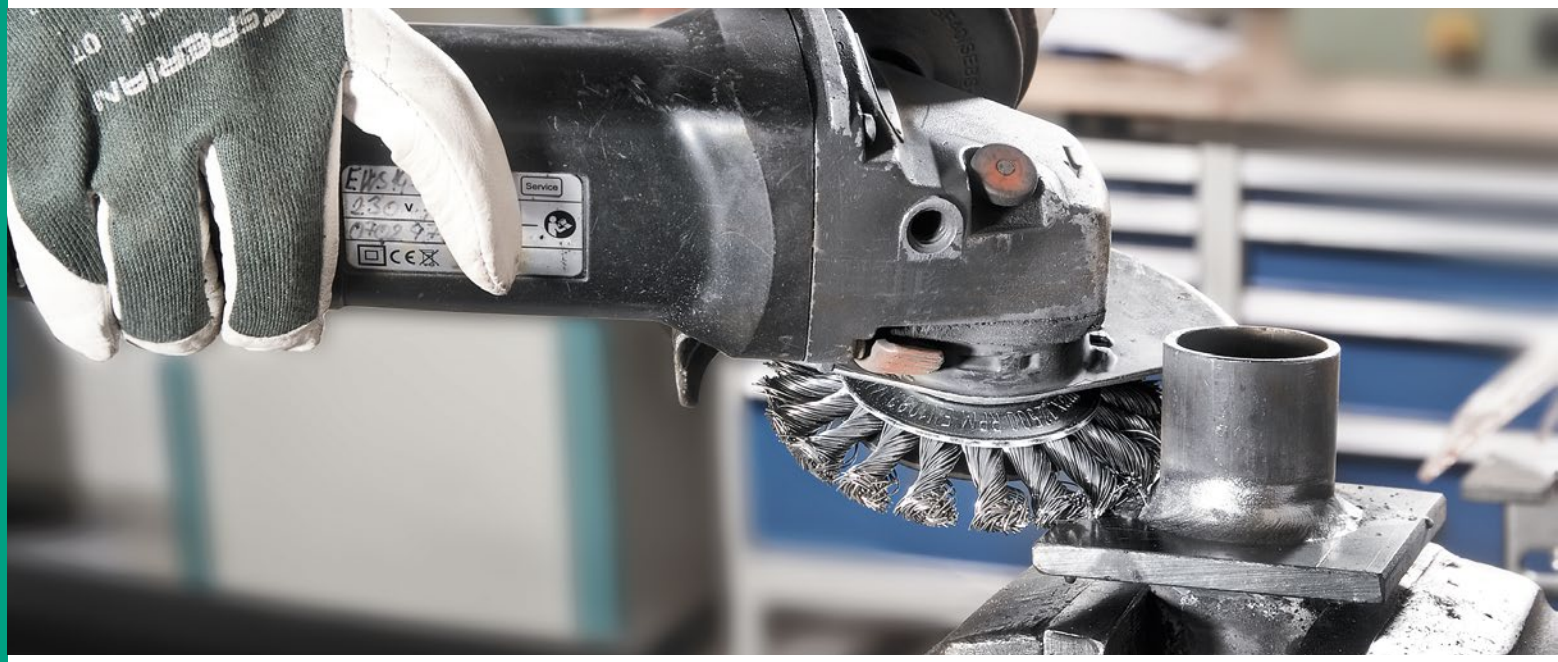

Bevel Brushes
The special shape of these brushes enables the user to work in hard to reach places. The knots are left hand twisted to increase stability. For promoting sales all standard knot bevel brushes are packed individually for self display. These brushes are also available bulk packed.

Wheel Brushes with thread
Like bevel brushes, wheel brushes with a thread are ideal for working in areas which are hard to reach. Usually the brushes are used on angle grinders.

Other measurements and filling materials are available on request.

Stainless Steel Brushes
LESSMANN brushes with stainless steel wire have green cups. We use wire with material number 1.4310. Material number 1.4401 can be used on request.
More information for brush applications on stainless materials you will find at www.lessmann.com

Bevel Brushes, left-right knotted
Left-right knotted bevel brushes usually are more aggressive, hence they are often used for heavy brushing operations.
Besides the knots open less, therefore there are ideal for the treatment of edges.

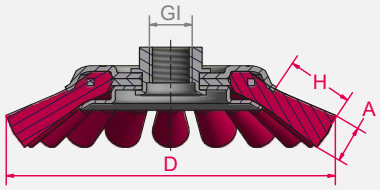

Z = number of knots

Item Nos. in bold are available ex stock.
Consider our minimum order value for *italic printed* article numbers (see page 178).

STA	= steel wire, crimped
STM	= brass coated steel wire
STH	= steel wire, high tensile, straight
ROF	= stainless steel wire, crimped
ROH	= stainless steel wire, high tensile, straight

Attention!
Starting in summer 2023, we will gradually convert all threads to star shape.

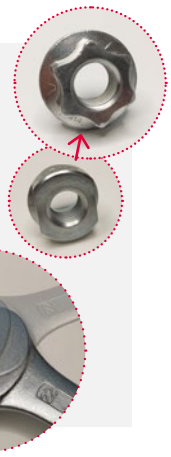

Six wrench flats instead of only two give you more flexibility when working.

1

2

3

4

5

6

7

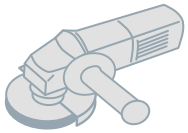

EAN

Knot Bevel Brushes, Steel Wire, Stainless Steel Wire

	D mm | *inch*	A mm | *inch*	Gl mm | *inch*	H	Z	RPM max.	Pack.	1 STH 0.35 | *0.014"* Art.-No.	1 STH 0.50 | *0.020"* Art.-No.	2 ROH 0.35 | *0.014"* Art.-No.	2 ROH 0.50 | *0.020"* Art.-No.
	100 | *4*	12 | *1/2*	M 10 x 1.5	20	18	15,000	1		**471.254**		
	100 | *4*	12 | *1/2*	M 14 x 2.0	20	18	15,000	1	**471.157***	**471.257**	**471.757***	**471.857***
	115 | *4 1/2*	12 | *1/2*	M 14 x 2.0	24	20	15,000	1	**472.157***	**472.257**	**472.757***	**472.857***
	115 | *4 1/2*	12 | *1/2*	M 14 x 2.0	24	24	15,000	1		**472.257.V4***		
	125 | *5*	12 | *1/2*	M 14 x 2.0	29	20	15,000	1		**473.257***		**473.857**
3	115 | *4 1/2*	12 | *1/2*	M 14 x 2.0	24	20	15,000	1		**472.257.WZ***		**472.857.WZ***

EAN

4 Knot Bevel Brushes, Steel Wire, Brass coated steel wire

D mm | *inch*	A mm | *inch*	Gl mm | *inch*	H	Z	RPM max.	Pack.	STM 0.35 | *0.014"* Art.-No.	STM 0.50 | *0.020"* Art.-No.
100 | *4*	12 | *1/2*	M 14 x 2.0	20	18	15,000	1	*471.157.SM**	
115 | *4 1/2*	12 | *1/2*	M 14 x 2.0	24	20	15,000	1		**472.257.SM***

EAN

Bevel Brushes, Crimped Wire

D mm | *inch*	A mm | *inch*	Gl	H	RPM max.	Pack.	5 STA 0.35 | *0.014"* Art.-No.	ROF 0.30 | *0.012"* Art.-No.	6 STM 0.30 | *0.012"* Art.-No.
100 | *4*	10 | *3/8*	M 14 x 2.0	20	15,000	1	**422.177***	**422.367***	**422.767**

EAN

7 Wheel Brushes, crimped wire, with thread

D mm | *inch*	A mm | *inch*	Gl	H	RPM max.	Pack.	STA 0.30 | *0.012"* Art.-No.	ROF 0.30 | *0.012"* Art.-No.	STM 0.30 | *0.012"* Art.-No.
115 | *4 1/2*	12 | *1/2*	M 14	24	12,500	1	**304.161.14**	*304.361.14*	**304.761.14**
125 | *5*	13 | *1/2*	M 14	19.5	12,500	1	**335.161.14**	**335.361.14**	**335.761.14**

* Packed 10 pieces per carton

Brushes for grass trimmers

Bevel Brushes

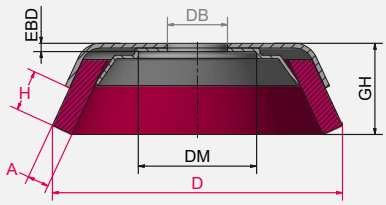

Wheel Brushes

ZF = Knot type
Z = number of knots
R = number of rows

Brushes for grass trimmers

Knotted brushes or Bevel Brushes with PBT on grass trimmers are ideal for removing weeds on grass pavers, curbstones, cobbled areas or other spots which are hard to reach. Those brushes clean larger areas like courtyards, terraces or longer alleys effortless and sustainable.

Besides, brushes are ecologically friendly and they remove weeds fast and effectively.

In sensitive areas such as agriculture synthetic filaments are a decisive criterion. Synthetic bristles are soft and therefore ideally suited for sensitive surfaces, as they do not scratch. The brush with synthetic bristles is ideal for grass trimmers with battery due to its lighter weight and scores with a longer service life and even wear.

Item Nos. in bold are available ex stock.
Consider our minimum order value for *italic printed* article numbers (see page 178).

STM	= brass coated steel, straight
STH	= steel wire, high tensile, straight
PBT	= Polyester PBT
PP	= Polypropylen

Attention:
When working with brushes on grass trimmers, please be aware of stringent safety rules. Please take note of the data sheet we attach the brushes or have a look at www.lessmann.com.

You can find our **tutorials** here:
www.lessmann.com/index.php/en/content/view/full/711

DBGM geschütztes Gebrauchsmuster protected utility model

1

2

3 yellow = PBT, red = PP

4

5

6

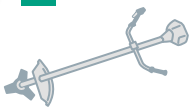

EAN

Knotted Bevel Brushes, for grass trimmers

	D mm | *inch*	A mm | *inch*	EBD	DM	H mm | *inch*	GH	Z	DB mm | *inch*	ZF	RPM max.	Pack.	**STH 0.50** | *0.020"* Art.-No.	**STM 0.50** | *0.020"* Art.-No.
1	155 | *6 1/8*	12 | *1/2*	3.5	50	35 | *1 3/8*	54	30	20 | *3/4*	B	10,000	1	**475.2M0.01**	**475.5M0.01**
	155 | *6 1/8*	12 | *1/2*	3.5	50	35 | *1 3/8*	54	30	25.4 | *1*	B	10,000	1	**475.2M1.01**	**475.5M1.01**
2	180 | *7*	14 | *9/16*	3.5	64	35 | *1 3/8*	58	36	20 | *3/4*	B	8,000	1	**476.2M0.01**	**476.5M0.01**
	180 | *7*	14 | *9/16*	3.5	64	35 | *1 3/8*	58	36	25.4 | *1*	B	8,000	1	**476.2M1.01**	**476.5M1.01**

EAN

Bevel Brushes, for grass trimmers, PBT

	D mm | *inch*	A mm | *inch*	EBD	DM	H mm | *inch*	GH mm | *inch*	DB mm | *inch*	RPM max.	Pack.	**PBT 2.50** Art.-Nr.	**PP 1.60** Art.-Nr.
3	180 | *7*	10 | *3/8*	3.5	60	55 | *2 3/16*	70	20 | *3/4*	10,000	1	**425.000.01**	**425.010.01**
	180 | *7*	10 | *3/8*	3.5	60	55 | *2 3/16*	70	25.4 | *1*	10,000	1	**425.001.01**	**425.011.01**
	200 | *8*	10 | *3/8*	3.5	80	60 | *2 3/8*	82	20 | *3/4*	8,000	1	**426.000.01**	**426.010.01**
	200 | *8*	10 | *3/8*	3.5	80	60 | *2 3/8*	82	25.4 | *1*	8,000	1	**426.001.01**	**426.011.01**

EAN

Bevel Brushes, for grass trimmers, crimped

	D mm | *inch*	A mm | *inch*	EBD	DM	H mm | *inch*	GH mm | *inch*	DB mm | *inch*	RPM max.	Pack.	**STA 0.50** Art.-Nr.
4	180 | *7*	18 | *23/32*	3.5	60	50 | *1 31/32*	70	20 | *3/4*	6,000	1	**425.290**
	180 | *7*	18 | *23/32*	3.5	60	50 | *1 31/32*	70	25.4 | *1*	6,000	1	**425.291**
	210 | *8 1/4*	25 | *1*	3.5	80	60 | *2 3/8*	82	20 | *3/4*	6,000	1	**426.290**
	210 | *8 1/4*	25 | *1*	3.5	80	60 | *2 3/8*	82	25.4 | *1*	6,000	1	**426.291**

EAN

Knotted Wheel Brushes, for grass trimmers

	D mm | *inch*	A mm | *inch*	EBR	DM	H mm | *inch*	Z	ZF	RPM max.	Pack.	**d = 20 mm** **STH 0.50** | *0.020"* Art.-No.	**d = 25.4 mm** **STH 0.50** | *0.020"* Art.-No.
5	175 | *6 7/8*	6 | *1/4*	8	68	34 | *1 1/4*	40	B	12,500	1	**475.260.01**	**475.261.01**
	200 | *8*	6 | *1/4*	8	68	46 | *1 49/64*	40	B	12,500	1	**476.260.01**	**476.261.01**
6	250 | *10*	6 | *1/4*	3	90	42 | *1 5/8*	56	B	10,000	1	**477.260.01**	**477.261.01**
	300 | *12*	6 | *1/4*	3	90	67 | *2 5/8*	56	B	10,000	1	**478.260.01**	**478.261.01**

X-LOCK brush assortment

LESSMANN®
THE GERMAN BRUSH COMPANY
+
X-LOCK
Technology by BOSCH
Invented for life

Quick. Simple. Safe.
The new X-LOCK quick-change system for angle grinders from Bosch noticeably simplifies tool changing. The user saves time and productivity is increased – ideal for professional applications.

Lessmann is also a major partner of Bosch and offers a comprehensive range of brushes suitable for the X-LOCK. All brushes meet the LESSMANN usual high quality standards – developed and produced „Made in Germany".

Advantages of X-LOCK
- Tool change in just one step: The brush is mounted quickly and easily on the angle grinder
- No accessories or additional tools required for assembly or tool change
- Safe: The brush audibly locks and is thereby securely fixed
- Highest quality and safety standards are met

TOOL CHANGE MADE EASY

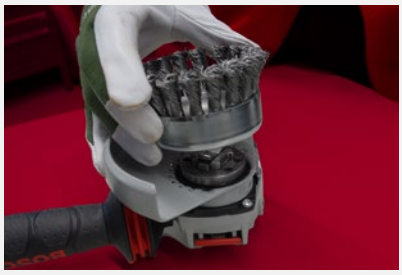

Mounting the tool

Place the brush on the X-LOCK holder of the angle grinder and press lightly. An audible click confirms that the tool has locked. Done.

Disassembly of the tool

Operate the lever on the angle grinder. The brush can be easily removed from the X-LOCK holder.

Item Nos. in bold are available ex stock.
Consider our minimum order value for *italic printed* article numbers (see page 178).

STM	= brass coated steel, straight
STH	= steel wire, high tensile, straight
PBT	= Polyester PBT
PP	= Polypropylen

Cup brushes

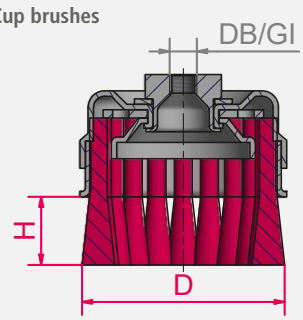

ZF = Knot type
Z = Number of knots
R = Number of rows

Bevel brushes

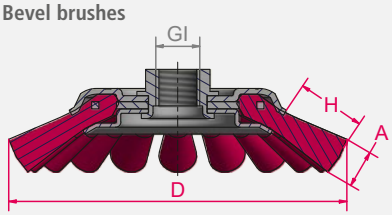

Wheel brushes

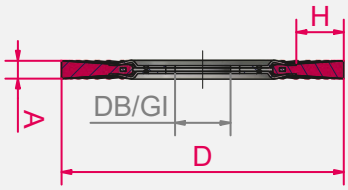

1

3

5

2

4

6

EAN

X-Lock cup brushes

knotted | crimped

	D mm | *inch*	B mm | *inch*	H mm | *inch*	Z	ZF	RPM max.	Pack.	STH 0,50 Art.-No.	ROF 0,50 Art.-No.	STA 0,35 Art.-No.	ROF 0,35 Art.-No.
1	85 | *3 3/8*	12 | *1/2*	20 | *13/16*	20	B	11.500	1	**483.21X**	**483.81X**		
2	85 | *3 3/8*	16 | *5/8*	22 | *7/8*	–	–	12.500	1			**423.16X**	**423.36X**

EAN

X-Lock bevel brushes

knotted | crimped

	D mm | *inch*	B mm | *inch*	H mm | *inch*	Z	ZF	RPM max.	Pack.	STH 0,50 Art.-No.	ROF 0,50 Art.-No.	STA 0,35 Art.-No.	ROF 0,35 Art.-No.
3	115 | *4 1/2*	12 | *1/2*	24 | *15/16*	20	B	15.000	1	**472.25X**	**472.85X**		
4	115 | *4 1/2*	16 | *5/8*	20 | *13/16*	–	–	15.000	1			**423.17X**	**423.37X**

EAN

X-Lock wheel brushes knotted

	D mm | *inch*	B mm | *inch*	H mm | *inch*	Z	ZF	RPM max.	Pack.	STH 0,50 Art.-No.	ROH 0,50 Art.-No.
5	115 | *4 1/2*	14 | *9/16*	23,5 | *15/16*	20	B	12.500	1	**472.21X**	**472.81X**
	125 | *4 15/16*	14 | *9/16*	28,5 | *1 1/8*	20	B	15.000	1	**473.21X**	**473.81X**

EAN

X-Lock pipeline brushes knotted

	D mm | *inch*	B mm | *inch*	H mm | *inch*	Z	ZF	RPM max.	Pack.	STH 0,50 Art.-No.	ROH 0,50 Art.-No.
6	115 | *4 1/2*	6 | *1/4*	21,5 | *7/8*	32	D	15.000	1	**472.20X.32**	**472.80X.32**
	125 | *4 15/16*	6 | *1/4*	26,5 | *1 1/16*	40	D	15.000	1	**473.20X.40**	**473.80X.40**

Low sparking brushes

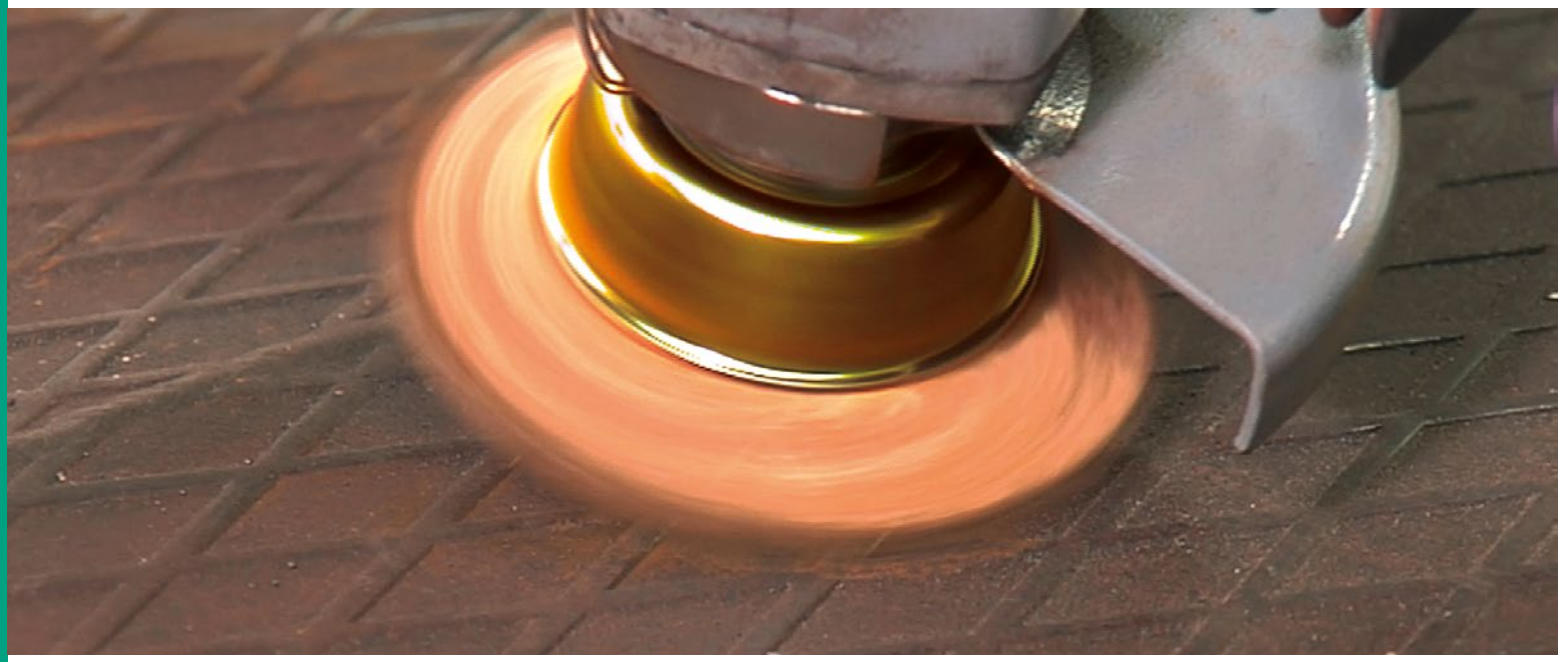

Low sparking brushes
are recommended for the working in areas where flammable steams, liquids or dusts are a part of the working conditions. Also, they are used in all other situations where sparks could lead to a potential fire or explosion hazard.

In explosion-proof areas, low sparking brushes are recommended. In comparison to the wooden handles of the hand brushes, the bodies of machine driven brushes are made of brass. The filling material is bronze CuSn6. These materials generate a low amount of sparks, which ensures a working environment with the minimum of sparks.

Another benefit of bronze is, its corrosion resistant properties

Typical application areas
Low sparking brushes are used in all industries and companies which have explosion risks or fire hazard due to flying sparks. e.g.:
- Oil and gas industry
- Pipeline industry
- Chemical industry
- Nuclear power plants
- Plastics industry
- Food industry, e.g.: bakeries
- And many others

For example cleaning tanks or working in an explosive environment.

Work instructions
- Low sparking brushes (with bronze filling) are a lot softer than other regularly used fill materials e.g. Steel and Stainless Steel
- Therefore these brushes have a higher abrasion rate, this means these brushes have to be used with more carefully so as not to damage the workpiece.

Item Nos. in bold are available ex stock.
Consider our minimum order value for *italic printed* article numbers (see page 178).

BRO = bronze wire

- Overuse is to be avoided.
- The use of low-sparking tools has to be not your only protection measure against fire or explosions.
- To ensure a comprehensive protection of staff and building please respect the given provisions of the different institutions, e.g.: provisions of trade associations, employers or legislators.

1 Handbrushes standard; KL 290

Rows	H mm | *inch*	Pack.	BRO 0.20/BRO 0.40* Art.-No.
3	25 | *1*	12	*108.331*
4	25 | *1*	12	**108.341**
5	25 | *1*	12	*108.351*
4	25 | *1*	12	*108.041**

2 Handbrushes export model; KL 350

Rows	H mm | *inch*	Pack.	BRO 0.30 Art.-No.
3	30 | *1 3/16*	6	**122.771**
4	30 | *1 3/16*	6	**122.821**
5	30 | *1 3/16*	6	*122.871*

3 Dusters; KL320

Rows	H mm | *inch*	Pack.	BRO 0.30 Art.-No.
4	40 | *1 5/8*	12	*124.181*

4 Spark Plug Brushes; KL 200

Rows	H mm | *inch*	Pack.	BRO 0.15 Art.-No.
3	15 | *19/32*	12	**132.801**

5 Brooms and scrubs

Rows	KL mm | *inch*	KB mm | *inch*	H mm | *inch*	Pack.	BRO 0.40 Art.-No.
6	300 | *12*	70 | *2 3/4*	55 | *2 11/64*	12	*146.270*
6	220 | *8 5/8*	60 | *2 3/8*	40 | *1 5/8*	12	*148.170*

Special models

	Rows	KL mm | *inch*	KB mm | *inch*	A mm | *inch*	H mm | *inch*	Pack.	BRO 0.15 crimped Art.-No.	BRO 0.08 crimped Art.-No.
6	7	150 | *6*	50 | *2*	140 | *5 533/64*	20 | *51/64*	12	**144.011**	
	6	180 | *7 3/32*	60 | *2 3/8*	170 | *6 11/16*	20 | *51/64*	12	**144.111**	
	6	150 | *6*	50 | *2*	130 | *15 1/8*	15 | *19/32*	12	**144.311**	
7	6	180 | *7 3/32*	60 | *2 3/8*	160 | *6 19/64*	20 | *51/64*	12	**144.411**	
8	11	120 | *4 23/32*	70 | *2 3/4*	110 | *4 21/64*	14 | *9/16*	4		**152.811**

Cup Brushes

	D mm | *inch*	d mm | *inch*	H mm | *inch*	H1 mm | *inch*	Z	RPM max.	Cup	Pack.	BRO 0.50 knotted Art.-No.
9	125 | *5*	16 | *5/8*	23 | *29/32*	15 | *19/32*	32	4,000	brass	1	*487.011.MS**

* This brush doesn't work with angle grinders.

Wheel Brushes

	D mm | *inch*	A mm | *inch*	EB mm | *inch*	R mm | *inch*	H mm | *inch*	d. Stand	d. min./max.	RPM	Pack.	BRO 0.30 crimped Art.-No.
10	150 | *6*	23-25 | *7/8-1*	22 | *7/8*	50 | *2*	33 | *1 19/64*	Set 3	13-50	6,000	1	*345.662.MS*

Cylinder Brushes; GL330

	D mm | *inch*	A mm | *inch*	GL mm	drilling wire	Pack.	BRO 0.20 Art.-No.
11	10 | *25/64*	100 | *4*	330	**MES 2.5**	10	**542.034**
	20 | *51/64*	100 | *4*	330	**MES 2.5**	10	**543.006**
	35 | *1 3/8*	100 | *4*	330	**MES 3.0**	10	**543.926**

GL = total length
KL = body length

LESSMANN®

THE GERMAN BRUSH COMPANY

BRUSHES WITH SHANK 04

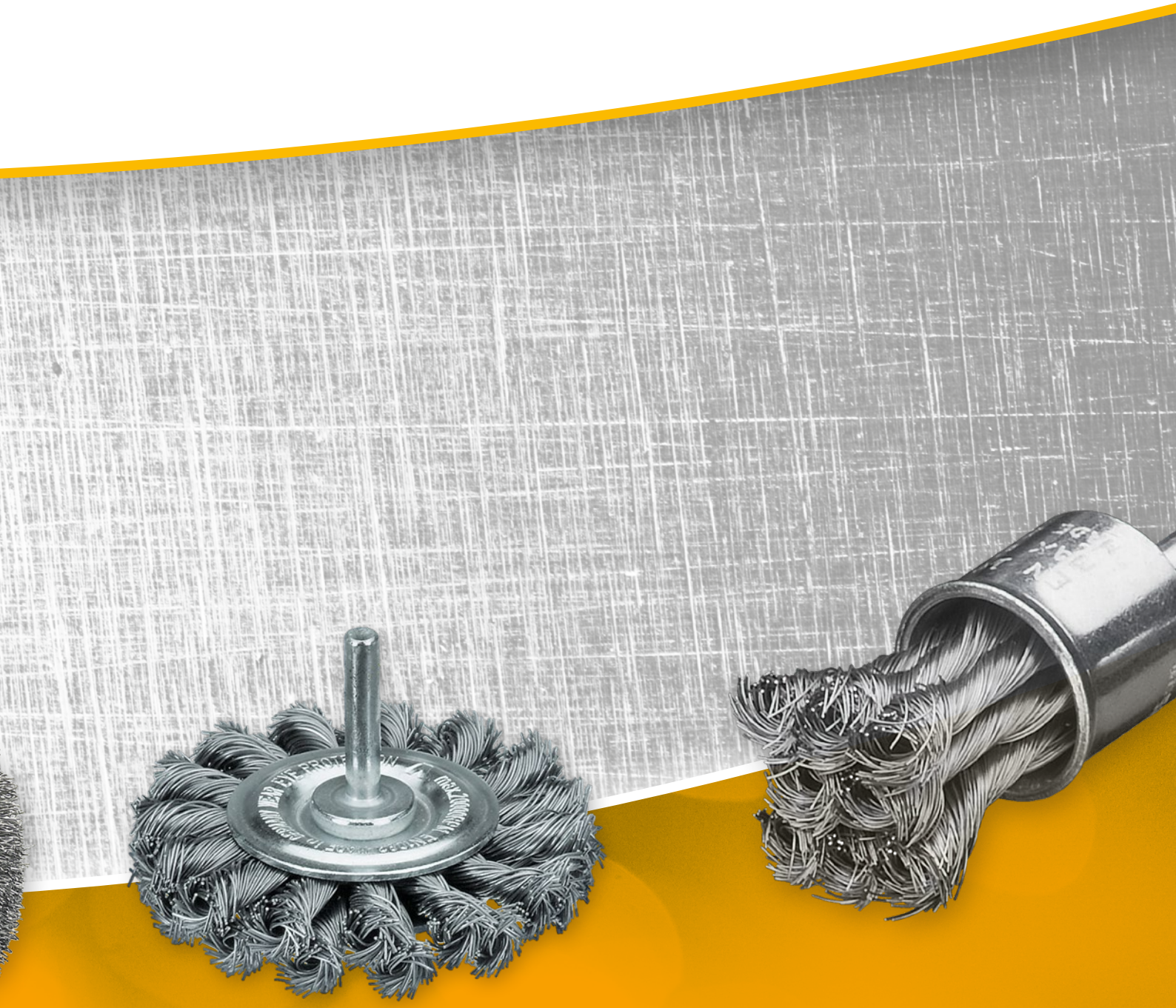

Wheel Brushes with Shank

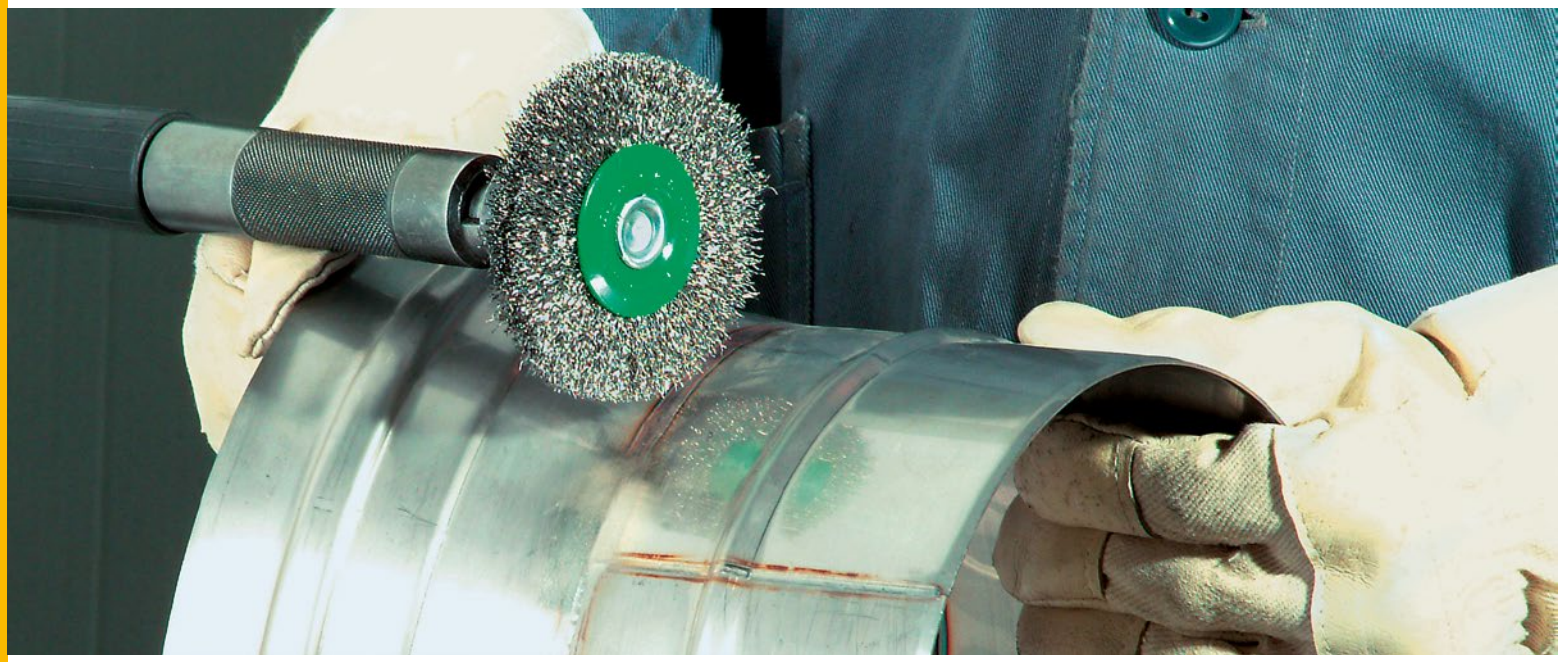

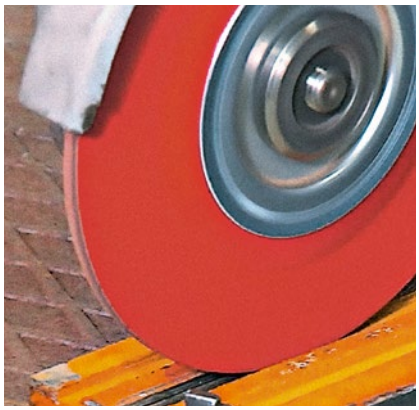

Wheel Brushes with Shank
The wheel brushes shown on these pages are manufactured with a mounted shank for professional use. Tight filling wire and balanced running make these brushes excellent tools.

Stainless Steel Brushes
LESSMANN brushes with stainless steel wire have green site plates. We use wire with material number 1.4310. Material number 1.4401. can be used on request.
More information for brush applications on stainless materials you will find at www.lessmann.com

Knotted Wheel Brushes with Shank
It does not matter if the brush has one or two rows, the brush is the prefect tool for removing underseal, rust deburring, roughening etc. For working in narrow places we recommend our brush 417.198.11, which is an especially narrow Brush.

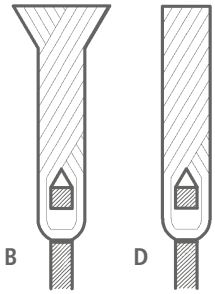

Knot types ZF
B: Rose Bud
D: Fully knotted (wire ends are cut completely)

You can find our **tutorials** here:
www.lessmann.com/index.php/en/content/view/full/711

You can find our **Enquiry Forms** in the respecitve category under:
www.lessmann.com/index.php/en/content/view/full/61
or in the catalog from page 173

The brushes have a 6 mm shank. On demand the brushes can also be supplied with 1/4" shanks (USA execution).

Brushes with other diameters, filling widths and filling material are available on request.

1

2

3

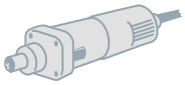

Knot Wheel Brushes with Shank Ø 6 mm

	D mm | *inch*	A mm | *inch*	H mm | *inch*	Z	ZF	R	RPM max.	Pack.	**STH 0.35** | *0.014"* Art.-No.	**STH 0.50** | *0.020"* Art.-No.	**ROH 0.50** | *0.020"* Art.-No.
1	75 | *3*	9 | *3/8*	15 | *5/8*	18	D	1	25,000	10	*417.178.11*	**417.198.11**	
	75 | *3*	12 | *1/2*	15 | *5/8*	18	B	1	25,000	10	**417.168**	**417.198**	**417.398**
2	75 | *3*	16 | *5/8*	15 | *5/8*	18	B	2	25,000	10		**417.199**	**417.399**

Wheel Brushes with Shank Ø 6 mm, Encapsulated

	D mm | *inch*	A mm | *inch*	H mm | *inch*	RPM max.	Pack.	**STA 0.30** | *0.012"* Art.-No.
3	50 | *2*	8 | *5/16*	13 | *1/2*	15,000	10	**415.160**
	60 | *2 3/8*	8 | *5/16*	18 | *3/4*	15,000	10	**416.160**
	76 | *3*	8 | *5/16*	23 | *7/8*	15,000	10	**417.160**

Encapsulated Brushes

By embedding in tough plastic the filling width always remains the same and early break of the wires can be prevented. It's the perfect tool for long lasting and safe working. The colour on the picture can differ from the colour on the brush.

Well marked

In future you will be able to recognize our encapsulated brushes even better by the new embossing or laser marking. This guarantees that you are holding a quality product "Made in Germany" in your hands.
All important safety information can also be easily read on the product.

Hardness Grading

From now on, the encapsulated brushes from Lessmann can be delivered in three different Shore hardness scale measurements:

- Black – Hard
- Red – Standard
- White – Soft

Please note:
The more aggressive the application, the harder the plastic material should be. Another advantage of the harder plastic material is the dimensional stability.

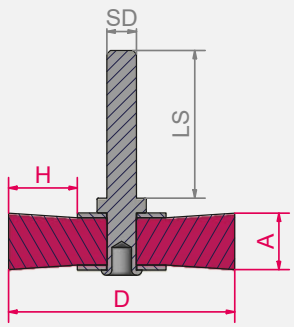

Z = number of knots, **R** = number of rows

Item Nos. in bold are available ex stock.
Consider our minimum order value for *italic printed* article numbers (see page 178).

STA = steel wire, crimped
STH = steel wire, high tensile, straight
ROH = stainless steel wire, high tensile

Wheel Brushes with Shank

1

2

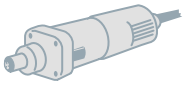

Wheel Brushes with Shank Ø 6 mm, Steel Wire

					1 | 2			
D	A	H	RPM	Pack.	**STA 0.15** | *0.006"*	**STA 0.20** | *0.008"*	**STA 0.30** | *0.012"*	**STA 0.50** | *0.020"*
mm | *inch*	mm | *inch*	mm | *inch*	max.		Art.-No.	Art.-No.	Art.-No.	Art.-No.
20 | *51/64*	6 | 15/64	3 | *1/8*	20,000	10	*411.132*	**411.142**		
30 | *1 3/16*	6 | 15/64	6 | *15/64*	20,000	10	**413.132**	**413.142**	**413.162**	
30 | *1 3/16*	9 | 23/64	6 | *15/64*	20,000	10	*413.133*	**413.143**	**413.163**	
40 | *1 3/8*	9 | 23/64	9 | *23/64*	18,000	10	**414.132**	**414.142**	**414.162**	**414.192**
40 | *1 3/8*	12 | 15/32	9 | *23/64*	18,000	10	*414.133*	**414.143**	**414.163**	*414.193*
50 | *2*	11 | 7/16	12 | *15/32*	15,000	10	*415.132*	**415.142**	**415.162**	**415.192**
50 | *2*	15 | 19/32	12 | *15/32*	15,000	10	**415.133**	**415.143**	**415.163**	*415.193*
60 | *2 3/8*	13 | 33/64	17 | *43/64*	15,000	10	*416.132*	**416.142**	**416.162**	available on demand
60 | *2 3/8*	18 | 45/64	17 | *43/64*	15,000	10	**416.133**	**416.143**	**416.163**	*416.193*
70 | *2 3/4*	9 | 23/64	19 | *3/4*	15,000	10	*417.132*	**417.142**	**417.162**	
70 | *2 3/4*	13 | 33/64	19 | *3/4*	15,000	10	**417.133**	**417.143**	**417.163**	**417.193**
80 | *3 1/4*	9 | 23/64	20 | *51/64*	15,000	10	available on demand	**418.142**		
80 | *3 1/4*	13 | 33/64	20 | *51/64*	15,000	10	available on demand	**418.143**	**418.162**	*418.192*
80 | *3 1/4*	19 | 3/4	20 | *51/64*	15,000	10			**418.163***	
100 | *4*	14 | 9/16	25 | *1*	12,000	10		**41Z.143***	**41Z.163***	
100 | *4*	19 | 3/4	25 | *1*	12,000	10		**41Z.144***	**41Z.164***	

* Shank length for these articles is 20 mm instead of 30 mm.

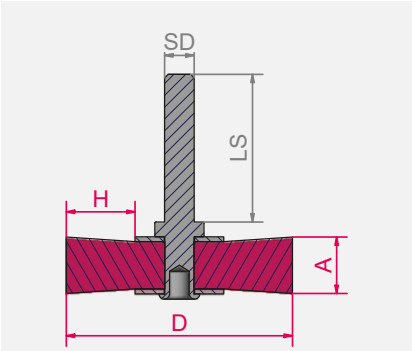

LS = $1^{3/16}$ inch

Item Nos. in bold are available ex stock.
Consider our minimum order value for *italic printed* article numbers (see page 178).

STA = steel wire, crimped
ROF = stainless steel wire, crimped
RO4 = stainless steel wire, straight, 1.4401

1

2

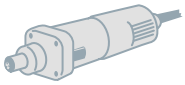

Wheel Brushes with Shank Ø 6 mm, Stainless Steel

D mm | *inch*	A mm | *inch*	H mm | *inch*	RPM max.	Pack.	1 ROF 0.10 | *0.004"* Art.-No.	ROF 0.20 | *0.008"* Art.-No.	ROF 0.30 | *0.012"* Art.-No.	RO4 0.20 | *0.008"* Art.-No.	RO4 0.30 | *0.012"* Art.-No.
20 | *51/64*	6 | *15/64*	3 | *1/8*	20,000	10		**411.342**			
30 | *1 3/16*	6 | *15/64*	6 | *15/64*	20,000	10		**413.342**	*413.362*		
30 | *1 3/16*	9 | *23/64*	6 | *15/64*	20,000	10		**413.343**	*413.363*		
40 | *1 3/8*	9 | *23/64*	9 | *23/64*	18,000	10		**414.342**	**414.362**		**414.462**
40 | *1 3/8*	12 | *15/32*	9 | *23/64*	18,000	10		**414.343**	available on demand		
50 | *2*	11 | *7/16*	12 | *15/32*	15,000	10	**415.312**	**415.342**	**415.362**	**415.442**	**415.462**
50 | *2*	15 | *19/32*	12 | *15/32*	15,000	10		**415.343**	**415.363**		
60 | *2 3/8*	13 | *33/64*	17 | *43/64*	15,000	10	**416.312**	**416.342**	**416.362**		**416.462**
60 | *2 3/8*	18 | *45/64*	17 | *43/64*	15,000	10		**416.343**	**416.363**		
70 | *2 3/4*	9 | *23/64*	19 | *3/4*	15,000	10		**417.342**	**417.362**		**417.462**
70 | *2 3/4*	13 | *33/64*	19 | *3/4*	15,000	10	**417.312**	**417.343**	**417.363**		
80 | *3 1/4*	9 | *23/64*	20 | *51/64*	15,000	10		**418.342**			**418.462**
80 | *3 1/4*	13 | *33/64*	20 | *51/64*	15,000	10	**418.312**	**418.343**	**418.362**		
80 | *3 1/4*	19 | *3/4*	20 | *51/64*	15,000	10			**418.363***		
100 | *4*	14 | *9/16*	25 | *1*	12,000	10		**41Z.343***	**41Z.363***		
100 | *4*	19 | *3/4*	25 | *1*	12,000	10		**41Z.344***	**41Z.364***		

* Shank length for these articles is 20 mm instead of 30 mm.

2 Wheel Brushes with Shank Ø 6 mm, Completely Stainless

D mm | *inch*	A mm | *inch*	H mm | *inch*	RPM max.	Pack.	ROF 0.20 | *0.008"* Art.-No.	ROF 0.30 | *0.012"* Art.-No.
50 | *2*	15 | *19/32*	12 | *15/32*	15,000	10	**415.301**	**415.302**
60 | *2 3/8*	17 | *43/64*	17 | *43/64*	15,000	10	**416.303**	*416.302*
70 | *2 3/4*	18 | *45/64*	19 | *3/4*	15,000	10	**417.306**	**417.309**

Wheel brushes with shank, completely stainless
All the inner and outer parts of these brushes (shanks, side plates, rings, etc.) are made of stainless steel, making these brushes the perfect tool for working in damp and difficult places.

Attention:
These brushes do not have green side plates.

Wheel Brushes with Shank

1

2

3

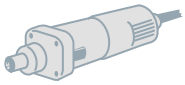

1 Wheel Brushes with Shank Ø 6 mm, brass coated steel wire

D mm | *inch*	A mm | *inch*	H mm | *inch*	RPM max.	Pack.	**STM 0.25** | *0.010"* Art.-No.
40 | *1 3/8*	9 | *23/64*	9 | *23/64*	18,000	10	*414.752*
50 | *2*	11 | *7/16*	12 | *15/32*	15,000	10	**415.752**
50 | *2*	15 | *19/32*	12 | *15/32*	15,000	10	*415.753*
60 | *2 3/8*	13 | *33/64*	17 | *43/64*	15,000	10	*416.752*
70 | *2 3/4*	9 | *23/64*	19 | *3/4*	15,000	10	**417.752**
70 | *2 3/4*	13 | *33/64*	19 | *3/4*	15,000	10	*417.753*
80 | *3 1/4*	9 | *23/64*	20 | *51/64*	15,000	10	*418.752*

2 Body Brushes with Shank Ø 6 mm

D mm | *inch*	A	H	RPM max.	Pack.	**STM 0.15** | *0.006"* Art.-No.	**STM 0.20** | *0.008"* Art.-No.
26 | 1	3 | *1/8*	4 | *5/32*	20.000	10	**412.731**	
50 | 2	3 | *1/8*	10 | *25/64*	15.000	10		**415.741**

Structuring Brushes with Shank Ø 8 mm

D mm | *inch*	A	H	RPM max.	Pack.	3 **STM 0.25** | *0.010"* Art.-No.	**SIC 80/1.2** Art.-No.
80 | *3 1/4*	35 | *1 3/8*	25 | *31/32*	4,000	1	**418.704**	
80 | *3 1/4*	35 | *1 3/8*	24 | *15/16*	15,000	1		**418.826**

Structuring Brushes with Shank

These brushes are special brushes which can be used for wood grain surfaces.

Body brushes with shank

The brushes allow access to hard-to-reach areas in the car body, such as folds and grooves for solder joints or interior angles. The brushes can be used to easily remove rust, sealant, paint or scale.
The brushes are also used for cleaning or activation on the surface before tinning.

Item Nos. in bold are available ex stock.
Consider our minimum order value for *italic printed* article numbers (see page 178).

STM = brass coated steel, crimped
MES = brass wire, crimped
SIC = silicon carbide bristles

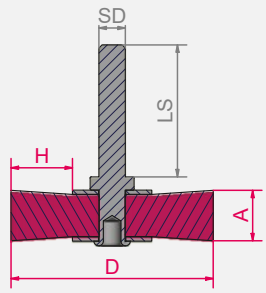

LS = $1^{3/16}$ inch

1

2

3

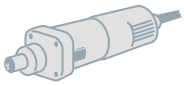

1 Wheel Brushes with Shank Ø 6 mm, Brass Wire

D mm | *inch*	A mm | *inch*	H mm | *inch*	RPM max.	Pack.	**MES 0.20** | *0.008"* Art.-No.	**MES 0.30** | *0.012"* Art.-No.
20 | *51/64*	5 | *13/64*	3 | *1/8*	20,000	10	**411.542**	
30 | *1 3/16*	5 | *13/64*	6 | *1/4*	20,000	10	**413.542**	
30 | *1 3/16*	8 | *5/16*	6 | *1/4*	20,000	10	*413.543*	
40 | *1 3/8*	7 | *9/32*	9 | *3/8*	18,000	10	**414.542**	
40 | *1 3/8*	10 | *25/64*	9 | *3/8*	18,000	10	*414.543*	
50 | *2*	10 | *25/64*	12 | *15/32*	15,000	10	**415.542**	
50 | *2*	14 | *9/16*	12 | *15/32*	15,000	10	**415.543**	
60 | *2 3/8*	12 | *15/32*	17 | *43/64*	15,000	10	**416.542**	*415.562*
60 | *2 3/8*	16 | *5/8*	17 | *43/64*	15,000	10	**416.543**	
70 | *2 3/4*	8 | *5/16*	19 | *3/4*	15,000	10	**417.542**	*417.562*
70 | *2 3/4*	12 | *15/32*	19 | *3/4*	15,000	10	**417.543**	*417.563*
80 | *3 1/4*	8 | *5/16*	20 | *51/64*	15,000	10	**418.542**	
80 | *3 1/4*	12 | *15/32*	20 | *51/64*	15,000	10	**418.543**	

2 Wheel Brushes with Shank Ø 6 mm, Silicon Carbide Bristles

D mm | *inch*	A mm | *inch*	H mm | *inch*	RPM max.	Pack.	**SIC 120/0.6** Art.-No.	**SIC 120/1.1** Art.-No.	**SIC 180/1.0** Art.-No.	**SIC 320/0.6** Art.-No.
30 | *1 3/16*	6 | *15/64*	6 | *15/64*	20,000	10	**413.841**			**413.871**
40 | *1 3/8*	15 | *19/32*	12 | *15/32*	18,000	10		**414.842**		**414.872**
50 | *2*	10 | *25/64*	12 | *15/32*	15,000	10		**415.842**	**415.852**	**415.872**
60 | *2 3/8*	10 | *25/64*	14 | *9/16*	15,000	10		*416.842*	*416.852*	*416.872*
70 | *2 3/4*	10 | *25/64*	20 | *51/64*	15,000	10		**417.842**	**417.852**	**417.872**
80 | *3 1/4*	12 | *15/32*	20 | *51/64*	15,000	10		**418.842**	*418.852*	**418.872**

3 Wheel Brushes with Shank Ø 6 mm, Cermaic Grit

D mm | *inch*	A mm | *inch*	H mm | *inch*	RPM max.	Pack.	**KK 120/1,1** Art.-Nr.	**KK 320/0,6** Art.-Nr.
50 | *2*	10 | *25/64*	12 | *15/32*	15,000	10	**415.C42**	**415.C72**
70 | *2 3/4*	10 | *25/64*	12 | *15/32*	15,000	10	**417.C42**	**417.C72**

Shank Brushes with Silicon Carbide Bristles
The high quality bristles with silicon carbide can be used for deburring, polishing and structuring of stainless steel, aluminium and plastic surfaces. Besides the articles mentioned on this page we can also supply other grits, diameters and widths.

Cup Shank Brushes

Cup Brushes with Shank
Ideal for working on medium and large areas.

Cup Shank Brushes with Plastic Cup
Cup Shank Brushes with Plastic Cup and stainless steel wire especially are used for applications on stainless steel materials.
The plastic cup prevents contact with the working piece, therefore it protects from corrosion or other foreign particles.

Bevel Brushes with Shank
Due to the conical form these universal tools are ideal for notches, corners, grooves, inside edges and irregular surfaces. These professional brushes are suitable for drills and cordless screwdrivers as well for high-speed straight grinders and compressed-air drives.

High speed – low wear
Brushes with steel and stainless steel wire can be used at higher RPM and can therefore be used on electrical and air driven grinding machines. These models are known for their high density of filling material and therefore they have a very long lifetime.

The brushes with silicon carbide bristles can be used for deburring, polishing or structuring of stainless steel, aluminium and plastic surfaces.

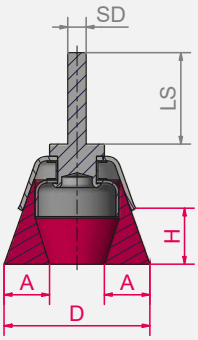

Z = number of knots
LS = $1^{3/16}$ inch

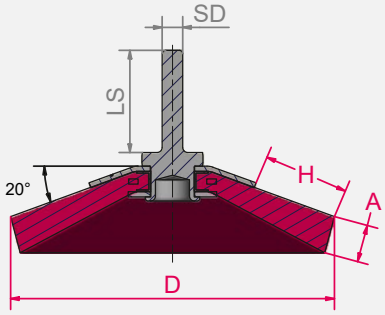

LS = $1^{3/16}$ inch

Item Nos. in bold are available ex stock.
Consider our minimum order value for *italic printed* article numbers (see page 178).

STA	= steel wire, crimped
STH	= steel wire, high tensile, straight
ROF	= stainless steel wire, crimped
MES	= brass wire, crimped
SIC	= silicon carbide bristles

Cup Brushes with Shank Ø 6 mm

D mm | *inch*	A mm | *inch*	H mm | *inch*	RPM max.	Pack.	1 STA 0.20 | *0.008"* Art.-No.	1 STA 0.30 | *0.012"* Art.-No.	1 ROF 0.20 | *0.008"* Art.-No.	1 ROF 0.30 | *0.012"* Art.-No.	2 MES 0.20 | *0.008"* Art.-No.	2 MES 0.30 | *0.012"* Art.-No.
40 | *1 3/8*	15 | *5/8*	20 | *3/4*	10,500	10	**434.142**	**434.162**	*434.342*	**434.362**	**434.542**	
50 | *2*	16 | *5/8*	20 | *3/4*	10,500	10	**435.142**	**435.162**	*435.342*	**435.362**	**435.542**	**435.562**
60 | *2 3/8*	18 | *3/4*	25 | *1*	8,000	10	available on demand	**436.162**	available on demand	**436.362**	available on demand	
70 | *2 3/4*	20 | *3/4*	25 | *1*	6,000	10	**437.142**	**437.162**	*437.342*	**437.362**	**437.542**	

3 Cup Brushes with Shank Ø 6 mm and plastic cup

D mm | *inch*	A mm | *inch*	H mm | *inch*	RPM max.	Pack.	ROF 0.20 | *0.008"* Art.-No.	ROF 0.25 | *0.010"* Art.-No.	ROF 0.30 | *0.012"* Art.-No.
40 | *1 3/8*	20 | *3/4*	30 | *1 1/4*	15,000	10	**434.345**	**434.355**	**434.365**
50 | *2*	25 | *1*	28 | *1 7/64*	10,500	10	**435.345**	**435.355**	**435.365**

4 Cup Brushes with Shank Ø 6 mm, Silicon Carbide Bristles

D mm | *inch*	A mm | *inch*	H mm | *inch*	RPM max.	Pack.	SIC 80/1.2 Art.-No.	SIC 320/0.6 Art.-No.
50 | *2*	10 | *3/8*	20 | *3/4*	4,500	10	**430.128**	**430.129**
75 | *3*	15 | *5/8*	22 | *7/8*	4,500	10	**430.138**	**430.139**

5 Knot Cup Brushes with Shank Ø 6 mm, Steel Wire

D mm | *inch*	H mm | *inch*	Z mm | *inch*	RPM max.	Pack.	STH 0.50 | *0.020"* Art.-No.
75 | *3*	20 | *3/4*	18 | *3/4*	8,500	10	**483.230**

6 Bevel Brushes with Shank Ø 6 mm

D mm | *inch*	A mm | *inch*	H mm | *inch*	RPM max.	Pack.	STA 0.30 Art.-No.	ROF 0.30 Art.-No.
70 | *2 3/4*	10 | *3/8*	15 | *5/8*	15,000	10	**4K7.161**	**4K7.361**
90 | *3 3/4*	12 | *1/2*	25 | *1*	12,000	10	**4K9.161**	**4K9.361**

End Brushes

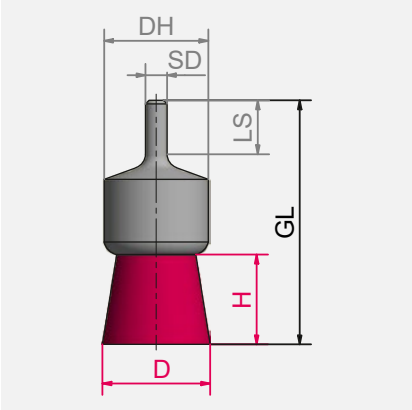

Item Nos. in bold are available ex stock.
Consider our minimum order value for *italic printed* article numbers (see page 178).

STA	= steel wire, crimped
STH	= steel wire, high tensile, straight
ROF	= stainless steel wire, crimped
SIC	= silicon carbide bristles

End Brushes with Shank
For cleaning and deburring in hard to reach areas, removal of paint, rubber excess, cleaning of moulds and castings. Also for working on edges and curves, and in the inside of the bores, etc. End brushes are also available in other shapes, spreaded or pointed.

These brushes are perfect for fast moving tools. On demand also with 1/4" shank available.

Special End Brushes, crimping
The special end brushes with narrow crimped wire are characterized by its dense filling. These brushes show a harder brushing effect than brushes with normal crimped wire. These brushes are also available with extra long shanks or different diameters.

Square End Brushes
This special tool enables e. g. cleaning of blind holes and processing of bottom and side surfaces in one step.
It's perfect for cleaning and easy deburring applications, e.g. square bores. Other diameters available on demand.

Encapsulated Brushes
By embedding in tough plastic the filling width always remains the same and early break of the wires can be prevented. It's the perfect tool for long lasting and safe working. The colour on the picture can differ from the colour on the brush.

Well marked
In future you will be able to recognize our encapsulated brushes even better by the new embossing or laser marking. This guarantees that you are holding a quality product "Made in Germany" in your hands.
All important safety information can also be easily read on the product.

Hardness Grading
From now on, the encapsulated brushes from Lessmann can be delivered in three different Shore hardness scale measurements:
- Black – Hard
- Red – Standard
- White – Soft

Please note:
The more aggressive the application, the harder the plastic material should be. Another advantage of the harder plastic material is the dimensional stability.

Stainlessless Steel Brushes
Further information for brushing on stainless steel you will find on www.lessmann.com

Special Design
For your order please state your requirements regarding the measures and wires.

1 2 3 4 5

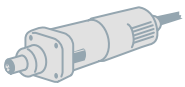

Special End Brushes with Shank Ø 6 mm, narrow crimping

	D mm | *inch*	DH mm | *inch*	H mm | *inch*	GL mm | *inch*	RPM max.	Pack.	**STH 0.35** | *0.014"* Art.-No.	**STH 0.50** | *0.020"* Art.-No.
1	11 | *7/16*	12 | *1/2*	25 | *1*	71 | *2 3/4*	12,000	10	**466.171**	available on demand
2	11 | *7/16*	12 | *1/2*	25 | *1*	71 | *2 3/4*	12,000	10	**466.172***	available on demand*
1	19 | *3/4*	22 | *7/8*	29 | *1 1/8*	72 | *2 3/4*	12,000	10	*460.121*	available on demand
2	19 | *3/4*	22 | *7/8*	29 | *1 1/8*	72 | *2 3/4*	12,000	10	*460.122**	available on demand*

3 Square End Brushes with Shank Ø 6 mm

D mm | *inch*	A mm | *inch*	GL mm | *inch*	RPM max.	Pack.	**STA 0.15** | *0.006"* Art.-No.	**STA 0.25** | *0.010"* Art.-No.	**ROF 0.30** | *0.012"* Art.-No.
25.4 | *1*	8 | *5/16*	84 | *3 1/4*	4,500	10	*469.131*	*469.151*	*469.362*
31.8 | *1 1/4*	8 | *5/16*	87 | *3 3/8*	4,500	10	*469.133*	*469.153*	available on demand

4 End Brushes with Shank Ø 6 mm, Encapsulated

D mm | *inch*	DH mm | *inch*	H mm | *inch*	GL mm | *inch*	RPM max.	Pack.	**STA 0.30** | *0.012"* Art.-No.
10 | *3/8*	10 | *3/8*	20 | *3/4*	65 | *2 1/2*	15,000	10	**451.160**
16 | *5/8*	16 | *5/8*	25 | *1*	72 | *2 7/8*	15,000	10	**452.160**
22 | *7/8*	22 | *7/8*	25 | *1*	72 | *2 7/8*	15,000	10	**453.160**
28 | *1 1/8*	28 | *1 7/64*	30 | *1 1/4*	75 | *3*	10,000	10	**456.160**

5 End Brushes with Shank Ø 6 mm, Silicon Carbide Bristles

D mm | *inch*	DH mm | *inch*	H mm | *inch*	GL mm | *inch*	RPM max.	Pack.	**SIC 120/1.1** Art.-No.	**SIC 180/1.0** Art.-No.	**SIC 320/0.6** Art.-No.
12 | *1/2*	10 | *3/8*	20 | *3/4*	60 | *2 3/8*	20,000	10	**451.831**	*451.851*	*451.871*
17 | *5/8*	16 | *5/8*	22 | *7/8*	68 | *2 3/4*	20,000	10	**452.831**	*452.851*	available on demand
23 | *7/8*	22 | *7/8*	25 | *1*	70 | *2 3/4*	10,000	10	*454.831*	**454.851**	**454.871**
30 | *1 1/4*	28 | *1*	30 | *1 1/4*	75 | *3*	10,000	10	*456.831*	**456.851**	**456.871**

* pointed

End Brushes

End Brushes with Shank Ø 6 mm, Steel Wire

	D mm | *inch*	DH mm | *inch*	H mm | *inch*	GL mm | *inch*	RPM max.	Pack.	Shape	**STA 0.15** | *0.006"* Art.-No.	**STA 0.20** | *0.008"* Art.-No.	**STA 0.30** | *0.012"* Art.-No.	**STA 0.50** | *0.020"* Art.-No.
1	12 | *1/2*	10 | *3/8*	20 | *3/4*	60 | *2 3/8*	20,000	10		**451.131**	**451.141**	**451.161**	**451.191**
2	12 | *1/2*	10 | *3/8*	20 | *3/4*	60 | *2 3/8*	20,000	10				**451.162***	*451.192**
3	12 | *1/2*	10 | *3/8*	20 | *3/4*	120 | *4 3/4*	15,000	10		**458.131**	**458.141**	**458.161**	**458.191**
4	17 | *5/8*	16 | *5/8*	22 | *7/8*	65 | *2 1/2*	20,000	10		*452.131*	**452.141**	**452.161**	**452.191**
5	23 | *7/8*	22 | *7/8*	25 | *1*	68 | *2 3/4*	18,000	10		**453.131**	**453.141**	**453.161**	**453.191**
	30 | *1 1/4*	29 | *1 1/8*	25 | *1*	68 | *2 3/4*	18,000	10		**456.131**	**456.141**	**456.161**	**456.191**
	50 | *2*	22 | *7/8*	18 | *3/4*	68 | *2 3/4*	18,000	10				**453.163****	
6	70 | *2 3/4*	29 | *1 1/8*	25 | *1*	68 | *2 3/4*	18,000	10				**456.163****	

End Brushes with Shank Ø 6 mm, Brassed Steel Wire, Cord Wire

D mm | *inch*	DH mm | *inch*	H mm | *inch*	GL mm | *inch*	RPM max.	Pack.	Shape	7 **STM 0.25** | *0.010"* Art.-No.	8 **STL 0.175** | *0.007"* Art.-No.	8 **STL 0.22** | *0.009"* Art.-No.
17 | *5/8*	16 | *5/8*	22 | *7/8*	65 | *2 1/2*	20,000	10		**452.751**	*452.703*	*452.705*
23 | *7/8*	22 | *7/8*	25 | *1*	68 | *2 3/4*	18,000	10		**453.751**	*453.703*	*453.705*
30 | *1 1/4*	29 | *1 1/8*	25 | *1*	68 | *2 3/4*	18,000	10		*456.751*	*456.703*	*456.705*

9 End Brushes with Shank Ø 6 mm, Steel Wire high tensile, dense version, longer lifetime

D mm | *inch*	DH mm | *inch*	H mm | *inch*	GL mm | *inch*	RPM max.	Pack.	Shape	**STH 0.30** | *0.012"* Art.-No.
12 | *1/2*	12 | *1/2*	20 | *3/4*	66 | *2 1/2*	20,000	10		**451.261.BD**
17 | *5/8*	16 | *5/8*	22 | *7/8*	65 | *2 1/2*	20,000	10		**452.261.BD**
23 | *7/8*	22 | *7/8*	25 | *1*	68 | *2 3/4*	18,000	10		**453.261.BD**
30 | *1 1/4*	29 | *1 1/8*	25 | *1*	68 | *2 3/4*	18,000	10		**456.261.BD**

End Brushes with Shank Ø 6 mm, Stainless Steel and Brass Wire

	D mm | *inch*	DH mm | *inch*	H mm | *inch*	GL mm | *inch*	RPM max.	Pack.	Shape	ROF 0.20 | *0.008"* Art.-No.	ROF 0.30 | *0.012"* Art.-No.	RO4 0.30 | *0.012"* Art.-No.	7 MES 0.20 | *0.008"* Art.-No.	7 MES 0.30 | *0.012"* Art.-No.
1	12 | *1/2*	10 | *3/8*	20 | *3/4*	60 | *2 3/8*	20,000	10		**451.341**	**451.361**	**451.461**	**451.541**	**451.561**
2	12 | *1/2*	10 | *3/8*	20 | *3/4*	60 | *2 3/8*	20,000	10			**451.362**		*451.542*	*451.562*
3	12 | *1/2*	10 | *3/8*	20 | *3/4*	120 | *4 3/4*	15,000	10		**458.341**	**458.361**		**458.541**	**458.561**
4	17 | *5/8*	16 | *5/8*	22 | *7/8*	65 | *2 1/2*	20,000	10		**452.341**	**452.361**		**452.541**	**452.561**
	23 | *7/8*	22 | *7/8*	25 | *1*	68 | *2 3/4*	18,000	10		**453.341**	**453.361**		**453.541**	**453.561**
5	30 | *1 1/4*	29 | *1 1/8*	25 | *1*	68 | *2 3/4*	18,000	10		**456.341**	**456.361**		**456.541**	**456.561**
6	50 | *2*	22 | *7/8*	18 | *3/4*	68 | *2 3/4*	18,000	10			**453.363**			

End Brushes with Shank Ø 6 mm, complete Stainless Steel

D mm | *inch*	DH mm | *inch*	H mm | *inch*	GL mm | *inch*	RPM max.	Pack.	Shape	ROF 0.30 | *0.012"* Art.-No.
12 | *1/2*	10 | *3/8*	20 | *3/4*	60 | *2 3/8*	20,000	10		**451.305**
17 | *5/8*	16 | *5/8*	22 | *7/8*	65 | *2 1/2*	20,000	10		**452.304**
23 | *7/8*	22 | *7/8*	25 | *1*	68 | *2 3/4*	18,000	10		**453.301**

Brushes also available with shrink tubing.

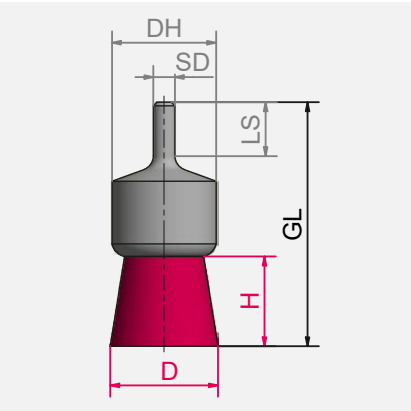

Item Nos. in bold are available ex stock.
Consider our minimum order value for *italic printed* article numbers (see page 178).

STA = steel wire, crimped
STH = steel wire, high tensile, crimped
STM = brass coated steel, crimped
STL = cord wire, crimped
ROF = stainless steel wire, crimped
MES = brass wire, crimped

Knot End Brushes

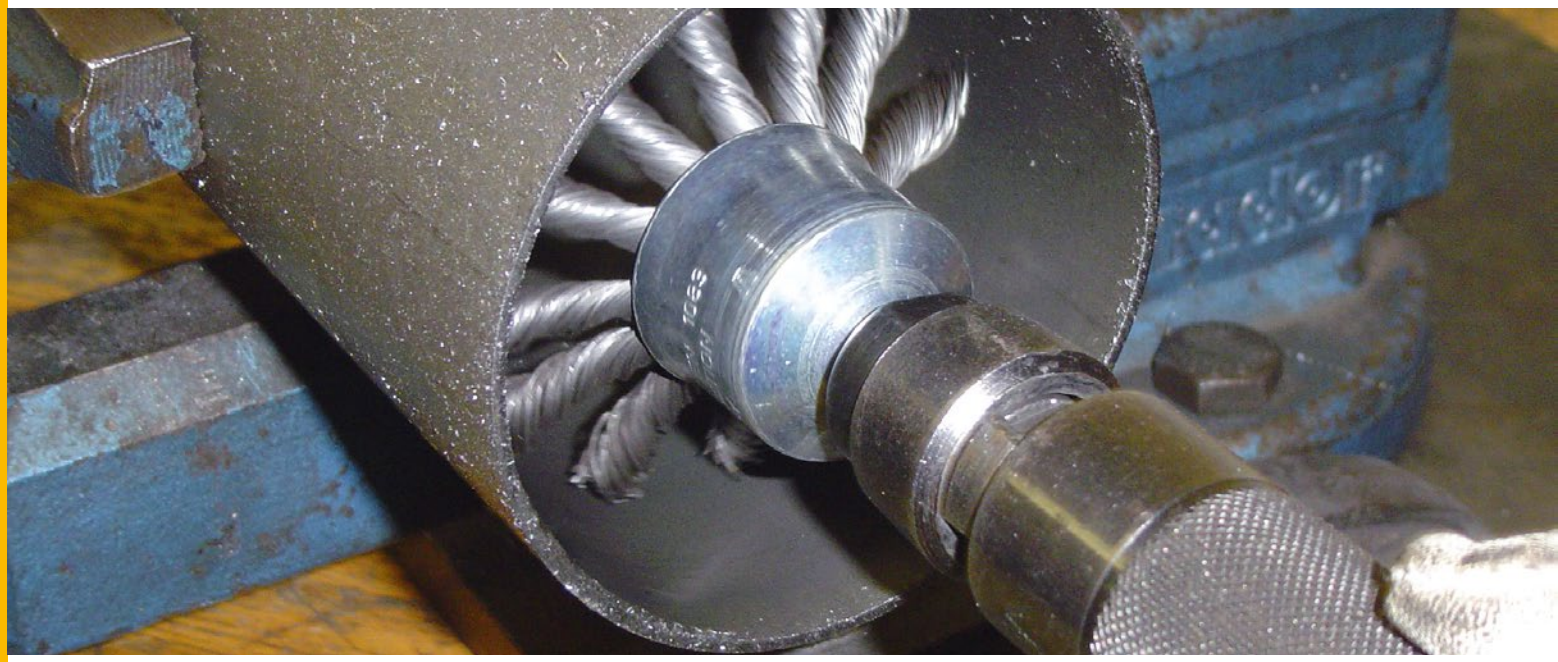

Opening of the end brushes depending on the RPM

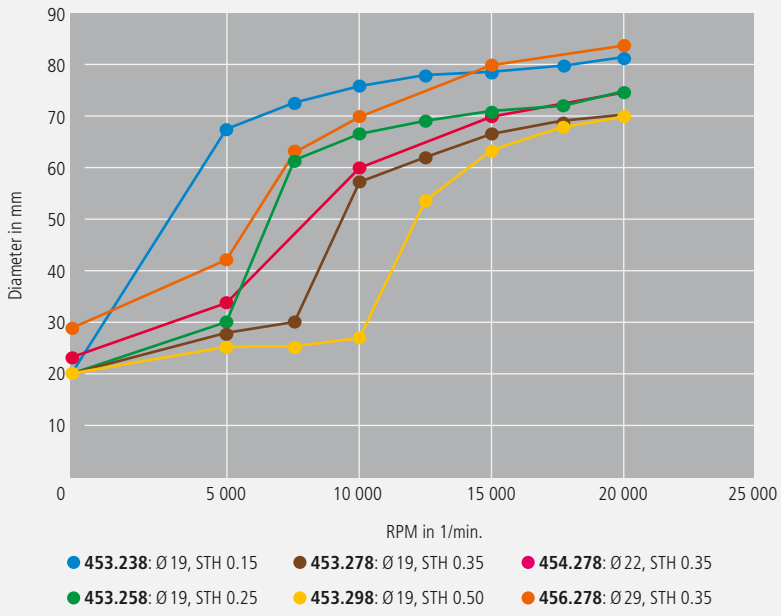

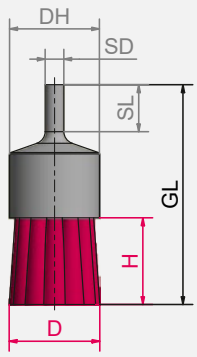

Z = number of knots

Item Nos. in bold are available ex stock.
Consider our minimum order value for *italic printed* article numbers (see page 178).

STH = steel wire, high tensile, straight
STM = brass coated steel, crimped
RO4 = stainless steel wire, straight, 1.4401

Knotted End Brushes with Shank
According to the RPM the brush will vary in dimension and enable the user to work in hard to reach areas such as drilled holes and recesses of all kinds.
The cups of the knot end brushes with stainless steel wire are **coated with plastic** to protect the stainless surface. Knotted end brushes with stainless steel wire are green characterized.

Further information on working on stainless steel you find at www.lessmann.com

Special End Brushes with Shank Ø 6mm, one Knot
One-knotted End Brushes to render precise working possible.

End Brushes, filled with epoxy resin
End Brushes filled with epoxy resin are able to treat small, defined areas. The brushes are more aggressive and allow a precise handling, hence they are used e.g. for electrical cabinets or for treating mounting surfaces.

You can find our **tutorials** here:
www.lessmann.com/index.php/en/content/view/full/711

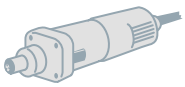

Knot End Brushes with Shank Ø 6 mm, Steel Wire

	D/DH mm | *inch*	GL mm | *inch*	H mm | *inch*	Z	ZF	RPM max.	Pack.	**STH 0.15** | *0.006"* Art.-No.	**STH 0.25** | *0.010"* Art.-No.	**STH 0.35** | *0.014"* Art.-No.	**STH 0.50** | *0.020"* Art.-No.
1	6/10 | *1/4/3/8*	65 | *2 1/2*	25 | *1*	1	D	4,500	10	available on demand	**451.258**	**451.278**	available on demand
2	19 | *3/4*	72 | *2 7/8*	28 | *1*	6	B	20,000	10	*453.238*	**453.258**	**453.278**	**453.298**
3	22 | *7/8*	72 | *2 7/8*	28 | *1*	8	B	20,000	10	*454.238*	**454.258**	**454.278**	**454.298**
4	29 | *1 1/8*	72 | *2 7/8*	28 | *1*	12	B	20,000	10	*456.238*	**456.258**	**456.278**	**456.298**
5	19 | *3/4*	72 | *2 7/8*	28 | *1*	4	B	20,000	50	available on demand	available on demand	**452.278.GH***	available on demand

6 Knot End Brushes with Shank Ø 6 mm, Brass coated steel wire

D/DH mm | *inch*	GL mm | *inch*	H mm | *inch*	Z	ZF	RPM max.	Pack.	**STM 0.25** | *0.010"* Art.-No.	**STM 0.35** | *0.014"* Art.-No.
19 | *3/4*	72 | *2 7/8*	28 | *1*	6	D	20,000	10	**453.758**	**453.778**
22 | *7/8*	72 | *2 7/8*	28 | *1*	8	D	20,000	10	**454.758**	*454.778*
29 | *1 1/8*	72 | *2 7/8*	28 | *1*	12	D	20,000	10	**456.758**	*456.778*

7 Knot End Brushes with Shank Ø 6 mm, Stainless Steel Wire

D/DH mm | *inch*	GL mm | *inch*	H mm | *inch*	Z	ZF	RPM max.	Pack.	**RO4 0.15** | *0.006"* Art.-No.	**RO4 0.25** | *0.010"* Art.-No.	**RO4 0.35** | *0.014"* Art.-No.	**RO4 0.50** | *0.020"* Art.-No.
6/10 | *1/4/3/8*	65 | *2 1/2*	25 | *1*	1	D	4,500	10	available on demand	**451.458**	**451.478**	available on demand
19 | *3/4*	72 | *2 7/8*	28 | *1*	6	B	20,000	10	**453.338**	**453.358**	**453.378**	*453.398*
22 | *7/8*	72 | *2 7/8*	28 | *1*	8	B	20,000	10	*454.338*	**454.358**	**454.378**	**454.398**
29 | *1 1/8*	72 | *2 7/8*	28 | *1*	12	B	20,000	10	*456.338*	**456.358**	**456.378**	**456.398**

* filled with epoxy resin

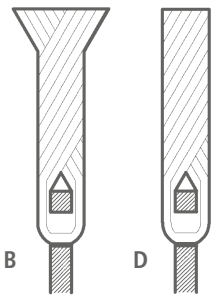

Knot types ZF
B: Rose Bud
D: Fully knotted (wire ends are cut completely)

Miniature Brushes

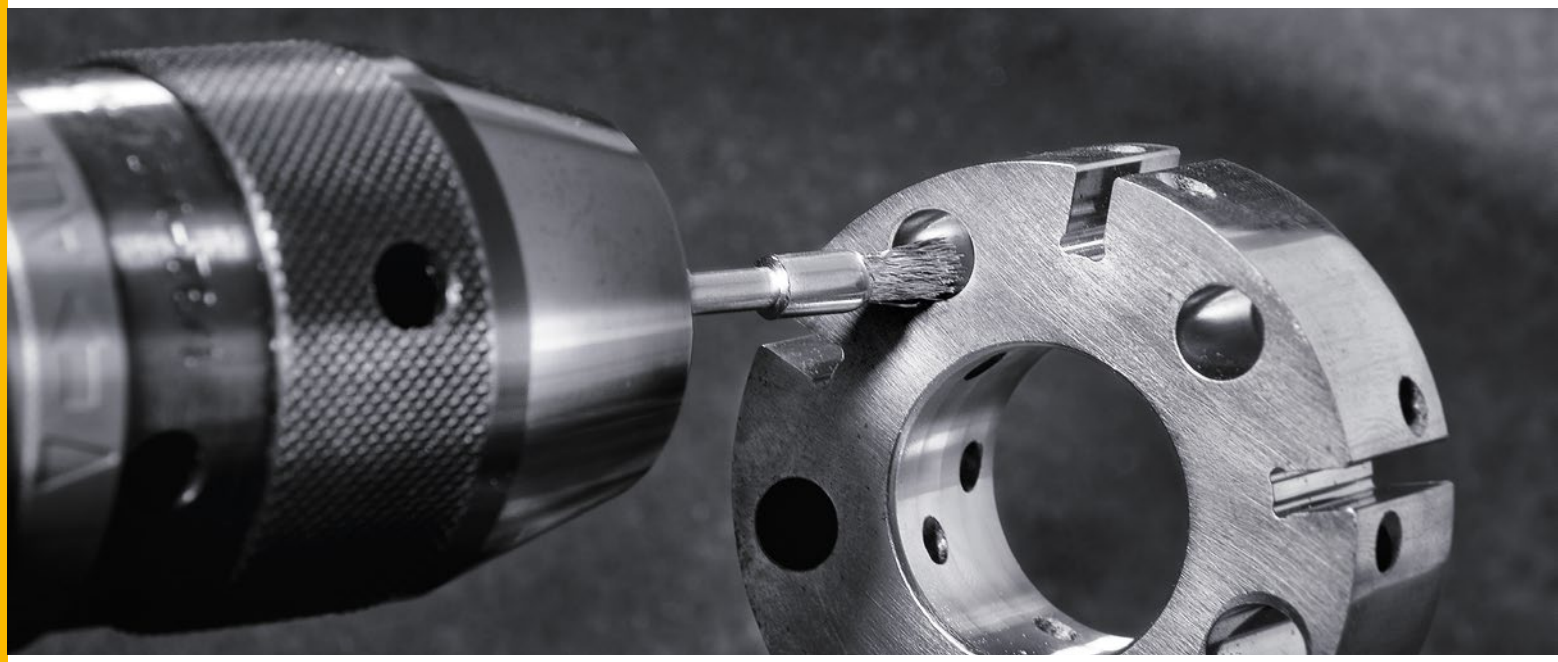

Miniature Brushes
Miniature Brushes are used for polishing, cleaning, or deburring of small-area surfaces or small working pieces. Miniature brushes remove waste and scale from weld seams or soldering points. The brushes are used on metal surfaces, steel, aluminum, cast iron, plastics, stone or wood.

Typical fields of applications:
- Precision tools
- Fine mechanics
- Pneumatic and hydraulics
- Electronics parts, e.g. plates

Miniature Brushes are available in different types as wheel, cup and end brushes.
The typical filling materials are steel wire, stainless steel wire, brass wire or abrasive bristles.

Stainless Steel Brushes
Information on working on stainless steel you find at www.lessmann.com

Please Note: Brushes with bristles or goat hair achieve an ideal brushing result by using polish.

All Brushes also available
with shank Ø 2.34 and 3.17 mm.

Item Nos. in bold are available ex stock.
Consider our minimum order value for *italic printed* article numbers (see page 178).

STH	= steel wire, high tensile, straight
ROF	= stainless steel wire, crimped
MES	= brass wire, crimped
PA	= polyamide
SIC	= silicon carbide bristles
AO	= aluminium oxide bristles

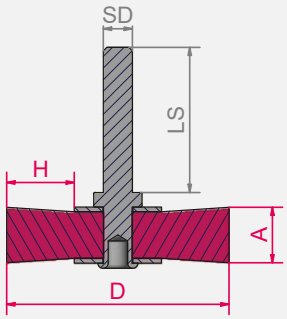

LS = $1^{11/16}$ inch

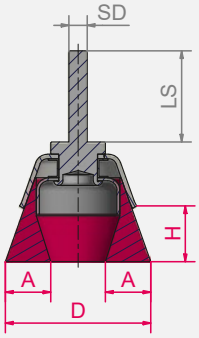

LS = $1^{11/16}$ inch

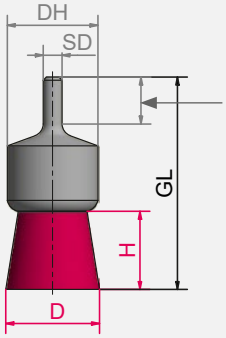

LS = $1^{1/32}$ inch

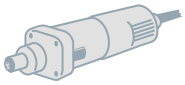

1 Miniature Wheel Brushes with shank Ø 3 mm

D mm | *inch*	A	H	RPM max.	Pack.	STH 0.10 Art.-No.	ROF 0.10 Art.-No.	MES 0.10 Art.-No.	SIC 320/0.55 Art.-No.	SIC 500/0.46 Art.-No.	SIC 800/0.25 Art.-No.	AO 320/0.50 Art.-No.
16 | *5/8*	2	3	15,000	10	**410.221**	**410.321**	*410.521*	*410.871*	*410.881*	*410.891*	*410.871.A0*
19 | *3/4*	2	5	12,000	10	**410.222**	**410.322**	**410.522**	*410.872*	*410.882*	*410.892*	*410.872.A0*
22 | *7/8*	2	6	10,000	10	**410.223**	**410.323**	**410.523**	*410.873*	**410.883**	*410.893*	*410.873.A0*

D mm | *inch*	A	H	RPM max.	Pack.	AO 500/0.46 Art.-No.	AO 600/0.30 Art.-No.	Diamond K400 Art.-No.	PA 0.15 Art.-No.	Bristle white Art.-No.	Bristle schwarz Art.-No.	Goat hair Art.-No.
16 | *5/8*	2	3	15,000	10	*410.801*	*410.891.A0*	*410.811.DB*	*410.031*	*410.001.WB*	*410.001.SB*	*410.001.ZH*
19 | *3/4*	2	5	12,000	10	*410.802*	*410.892.A0*	*410.812.DB*	*410.032*	*410.002.WB*	*410.002.SB*	*410.002.ZH*
22 | *7/8*	2	6	10,000	10	*410.803*	*410.893.A0*	*410.813.DB*	**410.033**	**410.003.WB**	**410.003.SB**	**410.003.ZH**

2 Miniature Cup Brushes with shank Ø 3 mm

D mm | *inch*	A	H	RPM max.	Pack.	STH 0.10 Art.-No.	ROF 0.10 Art.-No.	MES 0.10 Art.-No.	SIC 320/0.55 Art.-No.	SIC 500/0.46 Art.-No.	SIC 800/0.25 Art.-No.	AO 320/0.50 Art.-No.
15 | *5/8*	2	5	15,000	10	**430.222**	**430.322**	**430.522**	*430.872*	*430.882*	*430.892*	*430.872.A0*
18 | *3/4*	2	6	15,000	10	**430.223**	**430.323**	**430.523**	*430.873*	**430.883**	*430.893*	*430.873.A0*

D mm | *inch*	A	H	RPM max.	Pack.	AO 500/0.46 Art.-No.	AO 600/0.30 Art.-No.	Diamond K400 Art.-No.	PA 0.15 Art.-No.	Bristle white Art.-No.	Bristle schwarz Art.-No.	Goat hair Art.-No.
15 | *5/8*	2	5	15,000	10	*430.802*	*430.892.A0*	*430.812.DB*	**430.031**	**430.001.WB**	**430.001.SB**	**430.001.ZH**
18 | *3/4*	2	6	15,000	10	*430.803*	*430.893.A0*	*430.813.DB*	*430.032*	*430.002.WB*	*430.002.SB*	*430.002.ZH*

3 Miniature End Brushes with shank Ø 3 mm

D mm | *inch*	H	RPM max.	Pack.	STH 0.10 Art.-No.	ROF 0.10 Art.-No.	MES 0.10 Art.-No.	SIC 320/0.55 Art.-No.	SIC 500/0.46 Art.-No.	SIC 800/0.25 Art.-No.	AO 320/0.50 Art.-No.
5 | *13/64*	8	15,000	10	**450.221**	**450.311**	**450.521**	*450.871*	**450.881**	*450.891*	*450.871.A0*

D mm | *inch*	H	RPM max.	Pack.	AO 500/0.46 Art.-No.	AO 600/0.30 Art.-No.	Diamond K400 Art.-No.	PA 0.15 Art.-No.	Bristle white Art.-No.	Bristle schwarz Art.-No.	Goat hair Art.-No.
5 | *13/64*	8	15,000	10	*450.801*	*450.891.A0*	*450.821.DB*	**450.031**	**450.001.WB**	**450.001.SB**	**450.001.ZH**

All Brushes also available with shank Ø 2.34 and 3.17 mm.

LESSMANN®

THE GERMAN BRUSH COMPANY

HAND BRUSHES AND BROOMS

05

Hand Brushes

Hand Brushes
Hand Brushes are used everywhere, in the metal industry, construction work, in the workshop. They are found in every tool box. The complete range contains all types of filling materials, from coarse steel to the finest brass wire.

Perfect balance
LESSMANN Handbrushes are of superb quality and yet are affordable due to a fully automated and efficient production facility. Using modern marking systems individual printing of brands and EAN Bar Codes can be made. This is done by burning stamps or tampon printing at low cost.

Brake Caliper Brushes ROKI®
This brush has been manufactured in co-operation with the automobile industry. This brush is used for cleaning off clogged lining deposits when changing brake pad linings. Thus the brush is very slim with a heavy straight wire filling. Made in this way it prevents damage to sensitive brake areas during use. The brush 182.431 has to the top a sloping filling and is therefore extra hard. New is the two-components-handle with the latest ergonomical aspects. Because of the design and the ergonomic handle this brush is remarkably versatile to use.

Hand Brushes with Two-Components Handles
apply to other requirements of modern high quality tools with best ergonomics.

Rivet Brushes
The V shaped filling material enables the removal of slag and scale from normally hard to reach welds and fillet welds

Hand Brushes with Scraper
For painters and bricklayers in the construction industry. These brushes are ideal for scraping off dirt or cement splashes.

Hand Brushes, Heavy Duty
These models have a larger wooden handle and a longer and dense wire filling than our standard models.

Universal Wire Brushes
For many uses, especially in the Do It Yourself section.

Stainless Steel Brushes
Information on brushing on stainless materials you will find at www.lessmann.com

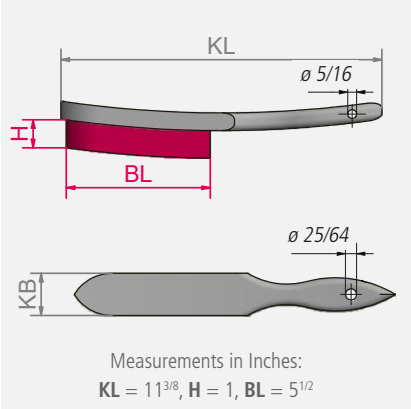

All standard hand brushes have a bar code stamp and LESSMANN-imprint.

The handles of all standard brushes are made of beech wood with two hanging holes.

Hand Brushes Standard

1 2 3 4

EAN

Hand Brushes

	Rows >	1	2	3	4	5	6
	Filling / Pack.	Art.-No.	Art.-No.	Art.-No.	Art.-No.	Art.-No.	Art.-No.
1	**STA** straight 0.35 | *0.014"* 12	**100.011**	**100.021**	**100.031**	**100.041**	**100.051**	**100.061**
	STA straight 0.35 | *0.014"* 100		**100.020**	**100.030**	**100.040**	**100.050**	
	STM crimped 0.30 | *0.012"* 12		**105.421**	**105.431**	**105.441**	**105.451**	*105.461*
	STA crimped 0.20 | *0.008"* 12			**102.431**	**102.441**		
	STA crimped 0.30 | *0.012"* 12	**102.611**	**102.621**	**102.631**	**102.641**	**102.651**	**102.661**
2	**ROF** crimped 0.15 | *0.006"* 12		**104.321**	**104.331**	**104.341**		
	ROF crimped 0.20 | *0.008"* 12		**104.421**	**104.431**	**104.441**	**104.451**	
	ROF crimped 0.35 | *0.014"* 12	**104.611**	**104.621**	**104.631**	**104.641**	**104.651**	**104.661**
	ROF straight 0.35 | *0.014"* 12	**103.711**	**103.721**	**103.731**	**103.741**	**103.751**	**103.761**
	RO8 straight 0.30 | *0.012"* 12			**105.731**	**105.741**		
3	**MES** crimped 0.15 | *0.006"* 12		**107.321**	**107.331**	**107.341**	**107.351**	
	MES crimped 0.25 | *0.010"* 12	*107.411*	**107.421**	**107.431**	**107.441**	**107.451**	*107.461*
	MES crimped 0.35 | *0.014"* 12	*107.611*	**107.621**	**107.631**	**107.641**	**107.651**	**107.661**
	MES straight 0.35 | *0.014"* 12		**106.621**	**106.631**	**106.641**	**106.651**	
	BRO crimped 0.20 | *0.008"* 12			*108.331*	**108.341**	*108.351*	
	BRO crimped 0.40 | *0.016"* 12				*108.041*		
	PA straight 0.40 | *0.016"* 12			**109.431**	**109.441**	**109.451**	
4	**FIB** 12				**109.741**		

Other filling materials and trim length on request.

PEFC
PEFC/04-31-0389

Promoting sustainable forest management
www.pefc.de

Item Nos. in bold are available ex stock.
Consider our minimum order value for *italic printed* article numbers (see page 178).

STA = steel wire
STM = brass coated steel
ROF = stainless steel wire
RO8 = stainless steel wire, extremely heat resistant
MES = brass wire
BRO = bronze wire
PA = polyamide
FIB = fibre

Special Hand Brushes

1 2 3 4 5 6

Special Hand Brushes

	Filling	Rows	KL	KB	BL	H	Pack.	Art.-No.
	ROKI® Brake Caliper Brushes with Two-Components		mm | *inch*	mm | *inch*	mm | *inch*	mm | *inch*		
1	**STA** straight 0.35 | *0.014"*	2 x 12/13	225 | *9*	12 | *1/2*	90 | *3 1/2*	22 | *7/8*	10	**182.401**
	STA crimped 0.30 | *0.012"*	2 x 12/13	225 | *9*	12 | *1/2*	90 | *3 1/2*	22 | *7/8*	10	**182.411**
2	**STA** straight 0.35 | *0.014"*	2 x 12/13	225 | *9*	12 | *1/2*	90 | *3 1/2*	14/22 | *1/2/7/8*	10	**182.431***
3	**ROF** straight 0.35 | *0.014"*	2 x 12/13	225 | *9*	12 | *1/2*	90 | *3 1/2*	22 | *7/8*	10	**182.421**
	RO4 straight 0.35 | *0.014"*	2 x 12/13	225 | *9*	12/18 | *1/2/3/4*	85 | *3 3/8*	22 | *7/8*	10	**182.441**
4	**MES** crimped 0.25 | *0.010"*	2 x 12/13	225 | *9*	12 | *1/2*	90 | *3 1/2*	22 | *7/8*	10	**182.451**
	Hand Brushes with Plastic Handles							
5	**STA** straight 0.35 | *0.014"*	2	285 | *11 1/4*	20 | *3/4*	130 | *5 1/8*	25 | *1*	10	**185.121**
	STA straight 0.35 | *0.014"*	3	285 | *11 1/4*	26 | *1*	130 | *5 1/8*	25 | *1*	10	**185.131**
	STA straight 0.35 | *0.014"*	4	285 | *11 1/4*	31 | *1 1/4*	130 | *5 1/8*	25 | *1*	10	**185.141**
	STA straight 0.35 | *0.014"*	5	285 | *11 1/4*	31 | *1 1/4*	130 | *5 1/8*	25 | *1*	10	**185.151**
	ROF crimped 0.35 | *0.014"*	2	285 | *11 1/4*	20 | *3/4*	130 | *5 1/8*	25 | *1*	10	**185.421**
	ROF crimped 0.35 | *0.014"*	3	285 | *11 1/4*	26 | *1*	130 | *5 1/8*	25 | *1*	10	**185.431**
	ROF crimped 0.35 | *0.014"*	4	285 | *11 1/4*	31 | *1 1/4*	130 | *5 1/8*	25 | *1*	10	**185.441**
	ROF crimped 0.35 | *0.014"*	5	285 | *11 1/4*	31 | *1 1/4*	136 | *5 1/8*	25 | *1*	10	**185.451**
	MES straight 0.35 | *0.014"*	2	285 | *11 1/4*	20 | *3/4*	130 | *5 1/8*	25 | *1*	10	**185.621**
	MES straight 0.35 | *0.014"*	3	285 | *11 1/4*	26 | *1*	130 | *5 1/8*	25 | *1*	10	**185.631**
	MES straight 0.35 | *0.014"*	4	285 | *11 1/4*	31 | *1 1/4*	130 | *5 1/8*	25 | *1*	10	**185.641**
	MES straight 0.35 | *0.014"*	5	285 | *11 1/4*	31 | *1 1/4*	130 | *5 1/8*	25 | *1*	10	**185.651**
	Hand Brushes with Two-Components Handles							
6	**ROF** straight 0.35 | *0.014"*	3	285 | *11 1/4*	26 | *1*	130 | *5 1/8*	25 | *1*	10	**186.431**

* The brush has to the top a sloping filling and is therefore extra hard
For the food industry

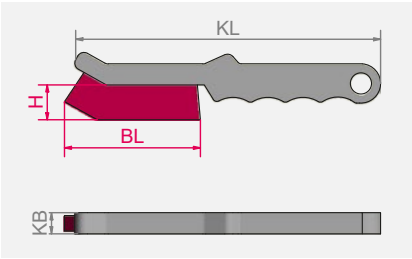

Special Hand Brushes

1 2 3 4 5 6 7

Special Hand Brushes

	Filling	Rows	KL	KB	Bl	H	Pack.	Art.-No.
EAN 1	**Rivet Brushes**		mm | *inch*	mm | *inch*	mm | *inch*	mm | *inch*		
	STA straight 0.35 | *0.014"*	3 x 15	290 | *11 3/8*	35 | *1 1/2*	135 | *5 3/8*	35 | *1 1/2*	12	**120.801**
	ROF straight 0.35 | *0.014"*	3 x 15	290 | *11 3/8*	35 | *1 1/2*	135 | *5 3/8*	35 | *1 1/2*	12	**120.811**
	RO8 straight 0.30 | *0.012"*	3 x 15	290 | *11 3/8*	35 | *1 1/2*	135 | *5 3/8*	35 | *1 1/2*	12	**120.831**
	ROF straight 0.35 | *0.014"* with Plastic Handles	3 x 15	290 | *11 3/8*	31 | *1 1/4*	135 | *5 3/8*	35 | *1 1/2*	12	**185.811**
2	**Hand Brushes with Scraper**							
	STA straight 0.35 | *0.014"*	4 x 15	290 | *11 3/8*	33 | *1 1/4*	130 | *5 1/8*	25 | *1*	12	**120.401**
EAN	**STA** straight 0.35 | *0.014"*	6 x 15	290 | *11 3/8*	38 | *1 1/2*	130 | *5 1/8*	25 | *1*	12	*120.601*
	ROF straight 0.35 | *0.014"*	4 x 15	290 | *11 3/8*	33 | *1 1/4*	130 | *5 1/8*	25 | *1*	12	*120.412*
3	**Hand Brushes Heavy Duty**							
	STA straight 0.35 | *0.014"*	2 x 16	290 | *11 3/8*	30 | *1 1/4*	150 | *6*	32 | *1 1/4*	12	**136.101**
	STA straight 0.35 | *0.014"*	3 x 16	290 | *11 3/8*	35 | *1 1/2*	150 | *6*	32 | *1 1/4*	12	**136.102**
	STA straight 0.35 | *0.014"*	4 x 16	290 | *11 3/8*	40 | *1 3/8*	150 | *6*	32 | *1 1/4*	12	**136.103**
	Hand Brushes Export Model							
4	**STA** straight 0.35 | *0.014"*	4 x 17	300 | *12*	30 | *1 1/4*	130 | *5 1/8*	25 | *1*	12	**122.401**
5	**STA** straight 0.35 | *0.014"*	4 x 19	350 | *14*	30 | *1 1/4*	160 | *6 3/8*	30 | *1 1/4*	6	**122.801**
6	**BRO** straight 0.30 | *0.012"*	3 x 19	350 | *14*	25 | *1*	153 | *6 1/32*	30 | *1 1/4*	6	**122.771**
	BRO straight 0.30 | *0.012"*	4 x 19	350 | *14*	30 | *1 1/4*	150 | *6*	30 | *1 1/4*	6	**122.821**
	BRO straight 0.30 | *0.012"*	5 x 19	350 | *14*	30 | *1 1/4*	153 | *6 1/32*	30 | *1 1/4*	6	*122.871*
7	**Universal Wire Brushes**							
	STM crimped 0.30 | *0.012"*	1	260 | *10 1/4*	10 | *3/8*	135 | *5 3/8*	28 | *1*	24	**056.001**
	STA crimped 0.35 | *0.014"*	1	260 | *10 1/4*	10 | *3/8*	135 | *5 3/8*	28 | *1*	24	**056.301**
	ROF crimped 0.30 | *0.012"*	1	260 | *10 1/4*	10 | *3/8*	135 | *5 3/8*	28 | *1*	24	**056.501**
	MES crimped 0.30 | *0.012"*	1	260 | *10 1/4*	10 | *3/8*	135 | *5 3/8*	28 | *1*	24	**056.701**

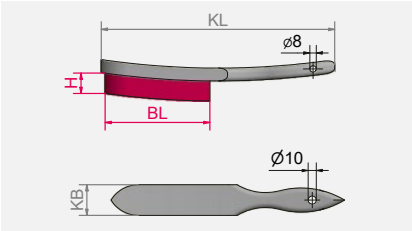

Item Nos. in bold are available ex stock.
Consider our minimum order value for *italic printed* article numbers (see page 178).

STA	= steel wire
STM	= brass coated steel
ROF	= stainless steel wire
RO4	= stainless steel wire, premium-quality
RO8	= stainless steel wire, extremely heat resistant
MES	= brass wire
BRO	= bronze wire

Spark Plug Brushes

1 2 3 4 5 6

Spark Plug Brushes

		Filling	Rows	KL mm | *inch*	KB mm | *inch*	BL mm | *inch*	H mm | *inch*	Pack.	Art.-No.
	1	**MES** crimped 0.15 | *0.006"*	2 x 5	100 | *4*	15 | *5/8*	25 | *1*	15 | *5/8*	12	**125.111**
EAN	2	**MES** crimped 0.15 | *0.006"*	3 x 5/6	150 | *6*	15 | *5/8*	40 | *1 3/8*	15 | *5/8*	12	**125.211**
EAN		**STA** crimped 0.15 | *0.006"*	3 x 5/6	150 | *6*	15 | *5/8*	40 | *1 3/8*	15 | *5/8*	12	**125.201**
EAN		**ROF** crimped 0.15 | *0.006"*	3 x 5/6	150 | *6*	15 | *5/8*	40 | *1 3/8*	15 | *5/8*	12	**125.231**
EAN		**MES** crimped 0.15 | *0.006"* / PP	3 x 5/6	150 | *6*	15 | *5/8*	40 | *1 3/8*	15 | *5/8*	12	**125.221**
EAN		**MES** crimped 0.15 | *0.006"*	3 x 5/6	150 | *6*	15 | *5/8*	40 | *1 3/8*	15 | *5/8*	12	**125.311***
EAN		**ROF** crimped 0.20 | *0.008"*	3 x 5/6	150 | *6*	15 | *5/8*	40 | *1 3/8*	15 | *5/8*	12	**125.241**
EAN		**PA** straight 0.30 | *0.012"*	3 x 5/6	150 | *6*	15 | *5/8*	40 | *1 3/8*	15 | *5/8*	12	**125.251**
	3	**BRO** crimped 0.15 | *0.006"*	3 x 5/6	200 | *8*	15 | *5/8*	40 | *1 3/8*	15 | *5/8*	12	**132.801**
		MES crimped 0.15 | *0.006"*	5 x 8/10	190 | *1 1/2*	25 | *1*	55 | *2 1/4*	18 | *3/4*	12	**125.511**
	4	**MES** crimped 0.15 | *0.006"* / PP	5 x 8/10	190 | *1 1/2*	25 | *1*	55 | *2 1/4*	12 | *1/2*	12	**125.521**
	5	**MES** crimped 0.15 | *0.006"*	4 x 6	155 | *6*	22 | *7/8*	40 | *1 3/8*	18 | *3/4*	12	**182.331****
		Soldering tip brush, extra dense filament, wooden handle orange							
EAN	6	**ROF** crimped 0.10 | *0.004"*	3 x 7/8	150 | *6*	15 | *5/8*	39 | *1 3/8*	9	12	**125.234**

* Wooden body varnished | ** Plastic body

Spark Plug Brushes

These small brushes are for all fine brushwork requiring thin wire.
They are available in different sizes and filling materials.

Soldering tip brushes

Soldering tip brushes have an extra dense and fine trimming. They are ideal for processing soldering tips and cleaning circuit boards after the soldering process as well as for many other fine jobs.

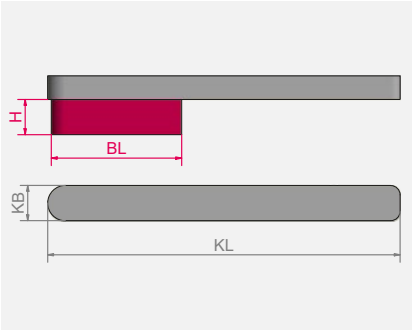

Item Nos. in bold are available ex stock.
Consider our minimum order value for *italic printed* article numbers (see page 178).

STA	= steel wire
ROF	= stainless steel wire
MES	= brass wire
BRO	= bronze wire
PA	= polyamide
PP	= polyprophylene
ROS	= horse hair

PEFC
PEFC/04-31-0389

Promoting sustainable forest management www.pefc.de

Fine Scratch Brushes

1 2 3 4 5 6 7 8 9

Fine Scratch Brushes

	Filling	Rows	KL mm | *inch*	KB mm | *inch*	BL mm | *inch*	H mm | *inch*	Pack.	Art.-No.
1	**MES** crimped 0.15 | *0.006"*	3	225 | *9*	16 | *5/8*	110 | *4 3/8*	20 | *3/4*	12	**126.311**
	MES crimped 0.15 | *0.006"*	4	225 | *9*	20 | *3/4*	110 | *4 3/8*	20 | *3/4*	12	**126.411**
	MES crimped 0.15 | *0.006"*	5	225 | *9*	24 | *1*	110 | *4 3/8*	20 | *3/4*	12	**126.511**
	MES crimped 0.15 | *0.006"*	6	225 | *9*	28 | *1*	110 | *4 3/8*	20 | *3/4*	12	*126.611*
	MES crimped 0.15 | *0.006"*	8	225 | *9*	36 | *1 1/2*	110 | *4 3/8*	20 | *3/4*	12	*126.811*
	MES crimped 0.08 | *0.003"*	4	220 | *8 5/8*	18 | *11/16*	100 | *4*	20 | *3/4*	12	**126.441**
	MES crimped 0.10 | *0.004"*	4	225 | *9*	20 | *3/4*	110 | *4 3/8*	20 | *3/4*	12	**126.431**
	ROF crimped 0.15 | *0.006"*	4	225 | *9*	20 | *3/4*	110 | *4 3/8*	20 | *3/4*	12	**126.481**
2	**STA** crimped 0.15 | *0.006"*	4	225 | *9*	20 | *3/4*	110 | *4 3/8*	20 | *3/4*	12	**126.401**
	RO4 crimped 0.15 | *0.006"*	4	225 | *9*	20 | *3/4*	100 | *4*	20 | *3/4*	12	**126.491**
3	**PA** straight 0.30 | *0.012"*	4	225 | *9*	20 | *3/4*	110 | *4 3/8*	20 | *3/4*	12	**126.451**
4	**ROS**	4	225 | *9*	20 | *3/4*	110 | *4 3/8*	20 | *3/4*	12	**126.472**
5	**ROF** crimped 0.15 | *0.006"*	4	225 | *9*	20 | *3/4*	100 | *4*	20 | *3/4*	12	**182.152****
	MES crimped 0.15 | *0.006"*	4	225 | *9*	20 | *3/4*	100 | *4*	20 | *3/4*	12	**182.162****
	PP straight 0.30 | *0.012"*	4	225 | *9*	20 | *3/4*	100 | *4 3/8*	20 | *3/4*	12	**182.172****
	ROS	4	225 | *9*	20 | *3/4*	100 | *4*	20 | *3/4*	12	**182.472****
	Special Brushes							
6	**MES** crimped 0.35 | *0.014"*	4 x 11/12	350 | *14*	22 | *7/8*	77 | *3*	10 | *3/8*	12	**182.807****
	MES crimped 0.35 | *0.014"*	4 x 11/12	400 | *15 3/4*	20 | *3/4*	77 | *3*	10 | *3/8*	12	**183.704****
	MES crimped 0.35 | *0.014"*	4 x 11/12	450 | *17 3/4*	22 | *7/8*	77 | *3*	10 | *3/8*	12	**182.811****
	MES crimped 0.30 | *0.012"*	5 x 9/8	700 | *27 1/2*	25 | *1*	54 | *2 1/4*	6 | *1/4*	12	*183.706***
7	**MES** crimped 0.35 | *0.014"*	4 x 11/12	350 | *14*	22 | *7/8*	80 | *3*	10 | *3/8*	12	**137.701**
8	**MES** crimped 0.30 | *0.012"*	5 x 9	700 | *27 1/2*	25 | *1*	54 | *2 1/4*	6 | *1/4*	12	**138.704**
	MES crimped 0.30 | *0.012"*	4 x 11/12	450 | *17 3/4*	22 | *7/8*	80 | *3*	8 | *5/16*	12	**138.705**
9	**MES** crimped 0.25 | *0.010"*	2 x 10	200 | *8*	15 | *5/8*	80 | *3*	19 | *3/4*	12	**132.701**

** Plastic body | For the food industry

Fine Scratch Brushes

Also called watchmaker and goldsmith brushes. The brushes have a very high density of filling wires and are available in different widths. These brushes are used among other things to apply solvents and other cleansing agents.

Special Brushes

The brushes were manufactured according to our customers' specification and show variations, which are possible through our flexible manufacturing procedures.

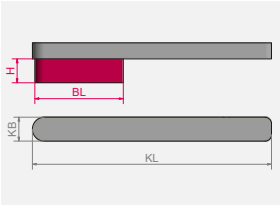

PEFC
PEFC/04-31-0389

Barbecue grill brushes

Barbecue grill brushes
For regular cleaning of grill grates, Barbecue grill brushes are ideal to remove even stubborn and burned dirt. With the right brush, your grate shines like new again.

Barbecue grill brushes Standard, with scraper
The all-rounder for every barbecue, the standard Barbecue grill brushes with a stainless steel scraper.

Barbecue grill brushes curved Duty, dense filament
The curved handle makes handling these Barbecue grill brushes even easier. Dense filling with soft bristles and a scraper made of stainless steel, burned dirt has no chance.

All Barbecue grill brushes have a bar code stamp and LESSMANN-imprint.

Barbecue grill brushes straight Duty, with scraper
Due to the hard and dense filling, heavy design particularly well suited for cleaning stubborn dirt. With the scraper made of stainless steel an effortless removal of burned dirt is possible.

Barbecue grill brushes „curved Duty"
The allrounder modified with bent trimming and high-quality Two-Components handles plastic body. Universal and agile, suitable for different grill gates, this brush is a highlight for every grill owner.

All Barbecue grill brushes with practical hanging hole and in a CutCase packaging.

Scraper flat

Scraper round

1 2 3 4 5 6

EAN

Barbecue grill brushes, crimped wire

Standard, with scraper

	KL mm | *inch*	KB mm | *inch*	H mm | *inch*	Rows	BL mm | *inch*	Scraper	Pack.	ROF 0.35 Art.-Nr.
1	290 | *11 3/8*	33 | *1 1/4*	25 | *1*	4	130 | *5 1/8*	flat	8	**120.413**
2	290 | *11 3/8*	33 | *1 1/4*	25 | *1*	4	130 | *5 1/8*	round	8	**120.423**

curved Duty, dense filament, with scraper

	KL mm | *inch*	KB mm | *inch*	H mm | *inch*	Rows	BL mm | *inch*	Scraper	Pack.	ROF 0.20 Art.-Nr.
3	250 | *10*	25 | *1*	23 | *7/8*	3	90 | *3 1/2*	round	8	**120.433**
4	250 | *10*	38 | *1 1/2*	23 | *7/8*	4	90 | *3 1/2*	round	8	**120.443**

straight Duty, with scraper

	KL mm | *inch*	KB mm | *inch*	H mm | *inch*	Rows	BL mm | *inch*	Scraper	Pack.	ROF 0.30 Art.-Nr.
5	290 | *11 3/8*	33 | *1 1/4*	20 | *3/4*	5	90 | *3 1/2*	round	12	**135.455**
6	500 | *20*	50 | *2*	20 | *3/4*	9	90 | *3 1/2*	round	9	**138.469**

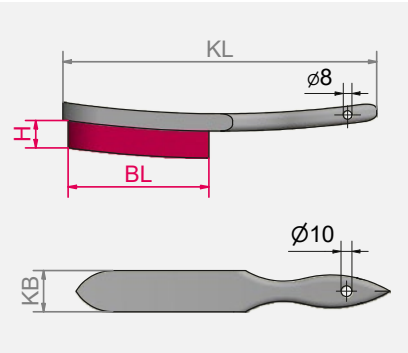

Item Nos. in bold are available ex stock.
Consider our minimum order value for *italic printed* article numbers (see page 178).

ROF = stainless steel wire

PEFC
PEFC/04-31-0389

Promoting sustainable forest management www.pefc.de

Special Models

Hand Brushes Rectangular and Violin
There are many filling wires in these stable universal brushes.

Hand Brushes with Bracket
The wooden body is pointed to the front end, the plastic bracket is nailed on. The model 140.901 has an adjustable stock board which enables an adjustment to brush firmness.

These special models are mainly ordered by our export customers.

Brushes for removing wet storage stain
Zinc coated surfaces are needed for corrosion protection. Often after the zinc coating of work parts, under wet conditions chemical reactions occur which cause wet storage stain. The special bronze wire allows the effective removal of white rust without smashing the zinc coating which has to be treated.

Radiator Brushes
This narrow, long shaped brush is ideal for hard to reach areas on heaters and radiators. The model 121.211 has a straight body, the other models have a curved body.

Staining Brushes
The treated wood is prepared with these staining brushes. By using fibre and bronze wire the brushes are insensitive against all normal chemical based solutions. The model 144.211 has an adjustable stock board which enables an adjustment to brush firmness.
With the staining brush 144.701 the surface after the staining process is polished by the leather insert strips. Any standing wood fibre is also smoothed.

File Cleaners
The brushes for cleaning wood and metal files are available in different sizes and with different file card. The file card is glued on to the wooden body.

File Card in Rolls
Various roughing-up tools can be manufactured with this material, which is also available in different sizes and filling materials. Available in meters or if required in single pieces.

Bricklayer's Brushes
For pre and retreatment of brickwork for painters and bricklayers. All models have a jute or plastic strap.

Plasterer's Brushes
These are for roughening and structuring of plaster. Body is made of beech wood, the steel pins are hardened.

Spiked Rollers
For use before the removal of wallpaper. The spiked roller perforates the paper allowing absorption of stripping solvent. The roller is of plastic with the steel pins obliquely arranged to ensure maximum efficiency in use. The handle can be made longer with customised telescopic handles. For safety the roller is supplied with a protective cover.

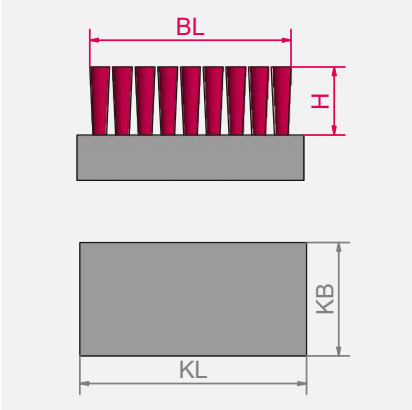

Item Nos. in bold are available ex stock.
Consider our minimum order value for *italic printed* article numbers (see page 178).

STA = steel wire
STM = brass coated steel
BRO = bronze wire

Special Hand Brushes

	Filling	Rows	KL	KB	BL	H	Pack.	Art.-No.
	Hand Brushes Rectangular and Violin		mm | *inch*	mm | *inch*	mm | *inch*	mm | *inch*		
1	**STA** straight 0.35 | *0.014"*	6 x 19	185 | *7 1/4*	57 | *2 1/4*	175 | *7*	30 | *1 1/4*	12	**140.201**
2	**STA** straight 0.35 | *0.014"*	5	200 | *8*	60 | *2 3/8*	190 | *7 1/2*	35 | *1 1/2*	16	**141.231**
3	**STM** straight 0.35 | *0.014"*	5	200 | *8*	55 | *2 1/4*	170 | *6 5/8*	40 | *1 3/8*	36	*140.641*
	Hand Brushes with Bracket							
4	**STA** straight ca. 0.35 | *0.014"*	5	225 | *9*	55 | *2 1/4*	200 | *8*	38 | *1 1/2*	16	**140.901***
5	**STM** crimped 0.35 | *0.014"*	5	225 | *9*	55 | *2 1/4*	200 | *8*	38 | *1 1/2*	16	**140.811**
	Hand Brushes with Strap							
6	**STA** straight 0.50 | *0.020"*	7	200 | *8*	70 | *2 3/4*	185 | *7 1/4*	35 | *1 1/2*	12	**141.421**
	Hand Brushes for removing wet storage stain							
7	**BRO** crimped 0.08 | *0.003"*	11 x 18	120 | *4 3/4*	70 | *2 3/4*	110 | *4 3/8*	14 | *4/7*	4	**152.811**

* with adjustable board

PEFC
PEFC/04-31-0389

Promoting sustainable forest management www.pefc.de

Special Models

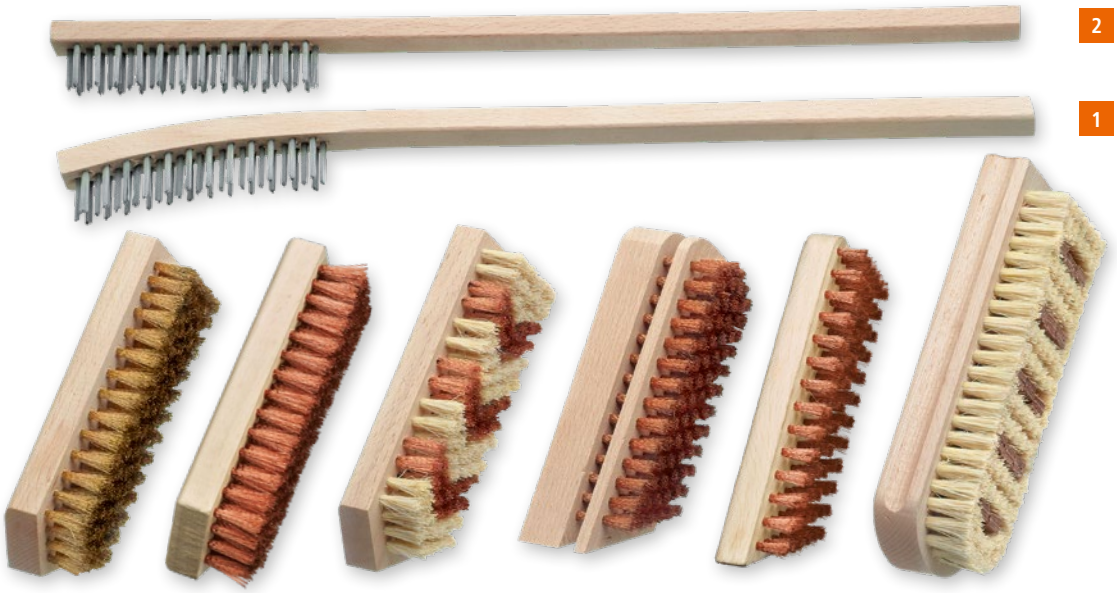

Radiator Brushes

	Filling	Rows	KL mm | *inch*	KB mm | *inch*	BL mm | *inch*	H mm | *inch*	Pack.	Art.-No.
1	**STA** straight 0.25 | *0.010"*	3 x 13	420 | *16 1/2*	20 | *3/4*	115 | *4 1/2*	20 | *3/4*	12	*121.111**
2	**STA** straight 0.25 | *0.010"*	3 x 13	420 | *16 1/2*	20 | *3/4*	115 | *4 1/2*	20 | *3/4*	12	**121.211****

Staining Brushes

	Filling	Rows	KL mm | *inch*	KB mm | *inch*	BL mm | *inch*	H mm | *inch*	Pack.	Art.-No.
3	**MES** crimped 0.15 | *0.006"*	7	150 | *6*	50 | *2*	140 | *5 1/2*	20 | *3/4*	12	**144.001**
4	**BRO** crimped 0.15 | *0.006"*	7	150 | *6*	50 | *2*	140 | *5 1/2*	20 | *3/4*	12	**144.011**
5	**BRO** 0.15 | *0.006"* / **FIB**	7	150 | *6*	50 | *2*	140 | *5 1/2*	20 | *3/4*	12	**144.021**
	BRO crimped 0.15 | *0.006"*	7	180 | *7*	60 | *2 3/8*	170 | *6 5/8*	20 | *3/4*	12	**144.111**
	BRO 0.15 | *0.006"* / **FIB**	7	180 | *7*	60 | *2 3/8*	170 | *6 5/8*	20 | *3/4*	12	**144.121**
6	**BRO** crimped 0.15 | *0.006"*	6	150 | *6*	50 | *2*	130 | *5 1/8*	20 | *3/4*	12	**144.211*****
	BRO crimped 0.15 | *0.006"*	6	150 | *6*	50 | *2*	130 | *5 1/8*	15 | *5/8*	12	**144.311**
7	**BRO** crimped 0.15 | *0.006"*	6	180 | *7*	60 | *2 3/8*	160 | *6 3/8*	15 | *5/8*	12	**144.411**

Wax Polishing Brush

	Filling	Rows	KL mm | *inch*	KB mm | *inch*	BL mm | *inch*	H mm | *inch*	Pack.	Art.-No.
8	**Leather + FIB**	3/7	175 | *6 7/8*	60 | *2 3/8*	160 | *6 3/8*	20 | *3/4*	12	**144.701**

* Wooden body curved | ** Wooden body straight | *** with adjustable board

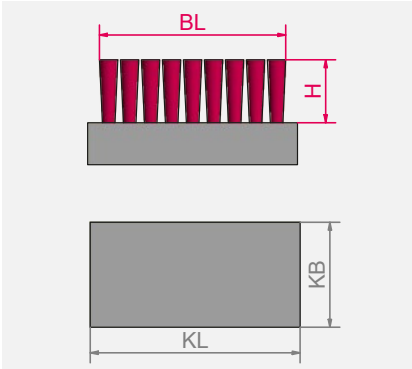

Item Nos. in bold are available ex stock.
Consider our minimum order value for *italic printed* article numbers (see page 178).

STA = steel wire
ROF = stainless steel wire
MES = brass wire
BRO = bronze wire
FIB = fibre

PEFC
PEFC/04-31-0389

Promoting sustainable forest management www.pefc.de

File Cleaners / Roughering Brushes

	File Cards	KL mm | *inch*	KB mm | *inch*	BL mm | *inch*	Pack.	Art.-No.
1	**STA** 0.30 | *0.012"*	210 | *8 1/4*	25 | *1*	100 | *4*	12	**037.101**
1	**STA** 0.30 | *0.012"*	250 | *10*	40 | *1 3/8*	115 | *4 1/2*	12	**037.201**
1	**STA** 0.30 | *0.012"*	250 | *10*	40 | *1 3/8*	115 | *4 1/2*	100	**037.200**
1	**ROF** 0.30 | *0.012"*	250 | *10*	40 | *1 3/8*	115 | *4 1/2*	12	**037.221**
2	**ROF** 0.60	170 | *6 3/4*	30 | *1 1/4*	24 | *1*	20	**037.710**

3 File Cards

Filling, without interval	STA 0.30 width 25 Art.-No.	STA 0.30 width 38 Art.-No.	STA 0.30 width 51 Art.-No.	ROF 0.30 width 38 Art.-No.
	000.311*	**000.321***	**000.331***	**000.323***

Bricklayer's Brushes with Strap

	Filling	Rows	KL mm | *inch*	KB mm | *inch*	BL mm | *inch*	H mm | *inch*	Pack.	Art.-No.
4	**STA** straight 0.25 | *0.010"*	9	210 | *8 1/4*	100 | *4*	200 | *8*	35 | *1 1/2*	12	**142.101**
5	**MES** crimped 0.20 | *0.008"* / **PVC**	9	210 | *8 1/4*	95 | *3 3/4*	200 | *8*	20 | *3/4*	12	*142.211***

Plasterer's Brushes

	Filling	KL mm | *inch*	KB mm | *inch*	BL mm | *inch*	H mm | *inch*	Pack.	Art.-No.
6	86 steel Pins hardend	190 | *7 1/2*	97 | *3 3/4*	165 | *6 1/2*	16 | *5/8*	12	**061.101**

7 Spiked Rollers

Filling	Rows	KL mm | *inch*	KB mm | *inch*	BL mm | *inch*	H mm | *inch*	Pack.	Art.-No.
steel Pins on plastic roller, with Protective Cover	12	290 | *11 3/8*	25 | *1*	148 | *5 7/8*	7 | *1/4*	10	*064.050*

* Please indicate length. | ** Wooden body varnished

Brooms and Scrubs

Brooms and Scrubs
Brooms and Scrubs for the use in all industrial companies and craftsman's establishments.

The shown brooms and scrubs are the best selling models.

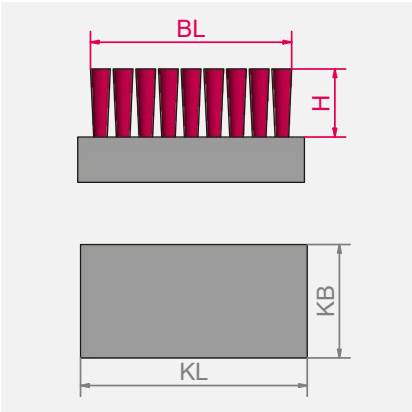

Item Nos. in bold are available ex stock.
Consider our minimum order value for *italic printed* article numbers (see page 178).

STA	= steel wire
ROF	= stainless steel wire
MES	= brass wire
BRO	= bronze wire

1 2 3 4 5 6

1 Brooms Flat Wooden Stock, with Handle Hole Ø 23 mm

Filling	Rows	KL mm | *inch*	KB mm | *inch*	BL mm | *inch*	H mm | *inch*	Pack.	Art.-No.
STA straight 0.50 | *0.020"*	5 x 16/17	250 | *10*	60 | *2 3/8*	270 | *10 5/8*	70 | *2 3/4*	12	*147.101*
STA straight 0.50 | *0.020"*	6 x 20/21	300 | *12*	70 | *2 3/4*	330 | *13*	70 | *2 3/4*	12	**147.201**
STA straight 0.50 | *0.020"*	6 x 20/21	300 | *12*	70 | *2 3/4*	330 | *13*	70 | *2 3/4*	42	*147.200*
ROF straight 0.50 | *0.020"*	6 x 20	300 | *12*	70 | *2 3/4*	330 | *13*	70 | *2 3/4*	12	*147.261*
STA straight 0.50 | *0.020"*	6 x 23	350 | *14*	70 | *2 3/4*	390 | *15 3/8*	70 | *2 3/4*	12	*147.301*

Brooms Raised Wooden Stock, with Handle Hole Ø 23 mm

	Filling	Rows	KL mm | *inch*	KB mm | *inch*	BL mm | *inch*	H mm | *inch*	Pack.	Art.-No.
2	**STA** straight 0.50 | *0.020"*	5 x 16/17	250 | *8 1/4*	60 | *2 3/8*	270 | *10 5/8*	70 | *2 3/4*	12	*146.101*
2	**STA** straight 0.50 | *0.020"*	6 x 20/21	300 | *12*	70 | *2 3/4*	330 | *13*	70 | *2 3/4*	12	**146.201**
3	**BRO** straight 0.40 | *0.016"*	6 x 20/21	300 | *12*	70 | *2 3/4*	320 | *12 51/64*	55 | *2 1/8*	12	*146.270*
2	**STA** straight 0.50 | *0.020"*	6 x 23/24	350 | *14*	70 | *2 3/4*	390 | *15 3/8*	70 | *2 3/4*	12	**146.301**

Scrubs, with Handle Hole Ø 23 mm

	Filling	Rows	KL mm | *inch*	KB mm | *inch*	BL mm | *inch*	H mm | *inch*	Pack.	Art.-No.
4	**STA** straight 0.35 | *0.014"*	6 x 16/17	220 | *8 5/8*	60 | *2 3/8*	225 | *9*	35 | *1 1/2*	12	**148.101**
4	**ROF** straight 0.35 | *0.014"*	6 x 16/17	220 | *8 5/8*	60 | *2 3/8*	225 | *9*	35 | *1 1/2*	12	**148.161**
4	**MES** crimped 0.25 | *0.010"*	6 x 16/17	220 | *8 5/8*	60 | *2 3/8*	225 | *9*	25 | *1*	12	**148.141**
5	**BRO** straight 0.40 | *0.016"*	6 x 16/17	220 | *8 5/8*	60 | *2 3/8*	225 | *9*	40 | *1*	12	*148.170*
6	**STA** straight 0.40 | *0.016"*	7 x 15/16	230 | *9*	65 | *2 1/2*	220 | *8 5/8*	35 | *1 1/2*	12	**148.601***

* Wooden body curved

Dusters

Dusters
Depending on the surrounding and application area, dusters are available in various models and with various filling materials. For coarse and light adherent dirt, dusters with wire filament are ideal.

The duster with polypropylene filament (straight plastic fibre) can be cleaned easily and therefore other surfaces do not get dirty. Since the water absorption of polypropylene is very low, the duster can be used also under wet conditions.

Further models in special execution with different filling materials and trim length available.

Dusters custom-made
Beside the mentioned models we provide special models with filling material and trim length according to your requirements.

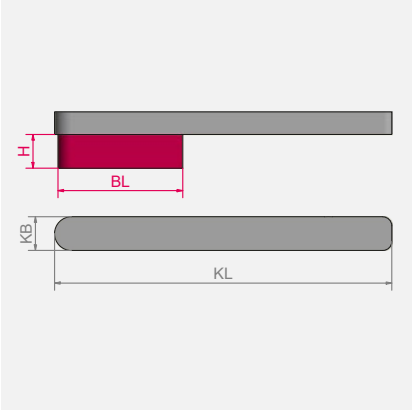

Item Nos. in bold are available ex stock.
Consider our minimum order value for *italic printed* article numbers (see page 178).

STA	= steel wire
MES	= brass wire
PP	= polypropylene
ROS	= horse hair
BRO	= bronze wire

1 2 3 4 5 6 7

Dusters

	Filling	Rows	KL mm | *inch*	KB mm | *inch*	BL mm | *inch*	H mm | *inch*	Pack.	Art.-No.
1	**Artificial COCO** Long Duty	4	430 | *17*	40 | *1 3/8*	165 | *6 1/2*	70 | *2 3/4*	20	**124.402**
2	**MES** crimped 0.25 | *0.010"*	4	320 | *12 1/2*	35 | *1 1/2*	180 | *7*	40 | *1 3/8*	12	**124.121**
3	**BRO** crimped 0.30 | *0.012"*	4	320 | *12 1/2*	35 | *1 1/2*	170 | *6 3/4*	40 | *1 3/8*	12	*124.181*
4	**STA** straight 0.25 | *0.010"*	4	320 | *12 1/2*	35 | *1 1/2*	180 | *7*	60 | *2 3/8*	12	**124.101**
EAN 5	**ROS**	6	300 | *12*	43 | *1 3/4*	165 | *6 1/2*	50 | *2*	20	**124.301***
6	**PP**	4	320 | *12 1/2*	35 | *1 1/2*	175 | *6 7/8*	70 | *2 3/4*	12	**124.801**
7	**PP** Long Duty	4	450 | *17 3/4*	33 | *1 1/4*	165 | *6 1/2*	70 | *2 3/4*	12	**124.841**

* Wooden body varnished

Weed Brushes and Weed Brooms

Weed Brush
This brush with V shaped filling material is ideal for the removal of moss and weeds in joints and edges on pavements, courtyards or cobbled areas.

Due to the long handle an ergonomic and effective working is possible. Without stooping, your back is preserved, though it is possible to remove weeds aggressively and precisely.

The brush with set filling material allows a cleaning of edges and joints which are hard to reach.

All standard hand brushes have a bar code stamp and LESSMANN-imprint.

Weed Broom
As well as the weed brush, the weed broom is a brush for outdoors.
Ideally moss and weeds can be removed from terrace boards or cobblestones. An easy and clean working without stooping makes the brush to an effective broom with depth effects. High quality, with brass coated steel wires guarantee a long lifetime of the brush in the well known LESSMANN quality „Made in Germany".

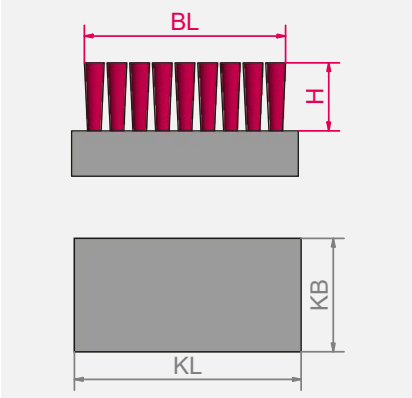

Item Nos. in bold are available ex stock.
Consider our minimum order value for *italic printed* article numbers (see page 178).

STA = steel wire

STM = brass coated steel

EAN

Weed Brushes, with Handle Hole Ø 23 mm

	Filling	KL mm | *inch*	KB mm | *inch*	H mm | *inch*	Rows	Pack.	Art.-No.
	without handle						
1	**STA** 0.35 | *0.014"*	100 | *4*	35 | *1 1/2*	36 | *1 1/2*	3	25	**151.108**
2	**STM** 0.35 | *0.014"* Filling set in working direction	100 | *4*	35 | *1 1/2*	36 | *1 1/2*	3	25	**151.511**
3	**STA** 0.35 | *0.014"* with scraper	100 | *4*	35 | *1 1/2*	42 | *1 5/8*	3	25	**151.109**
	with handle, 1400 mm long, Ø 28 mm						
	STA 0.35 | *0.014"*	100 | *4*	35 | *1 1/2*	36 | *1 1/2*	3	30	*151.991.07**
4	**STA** 0.35 | *0.014" with scraper*	100 | *4*	35 | *1 1/2*	36 | *1 1/2*	3	24	*151.992.07**
	STM 0.35 | *0.014"* Filling set in working direction	100 | *4*	35 | *1 1/2*	36 | *1 1/2*	3	30	*151.995.07**

EAN

Weed Broom, with Handle Hole Ø 23 mm

	Filling	KL mm | *inch*	KB mm | *inch*	H mm | *inch*	Rows	Pack.	Art.-No.
	without handle						
5	**STM** 0.50 | *0.020"*	140 | *5 1/2*	60 | *2 3/8*	70/60 | *2 3/4 /2 3/8*	10/9	16	**152.510**
	with handle, 1400 mm long, Ø 28 mm						
	STM 0.50 | *0.020"*	140 | *5 1/2*	60 | *2 3/8*	70/60 | *2 3/4 /2 3/8*	10/9	12	**152.995.07***

* Delivery only in full packaging units.

LESSMANN®

THE GERMAN BRUSH COMPANY

INTERIOR BRUSHES 06

Micro Interior Brushes

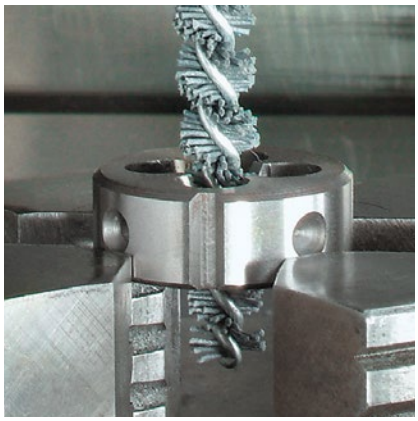

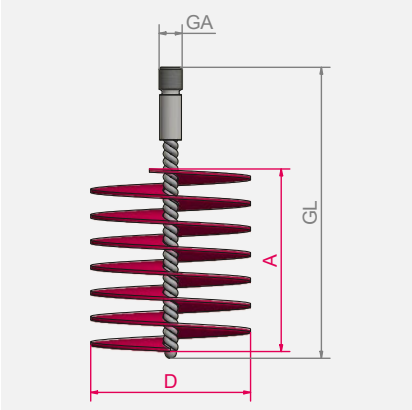

Item Nos. in bold are available ex stock.
Consider our minimum order value for *italic printed* article numbers (see page 178).

AO	= aluminium oxide bristles
KK	= ceramic grit

Interior brushes with zinc coated twisted wire and single spiral
Due to the filling of aluminium oxide or silicon carbide their usage is more flexible than with conventional interior brushes.

Interior brushes with abrasive filaments are usually used for deburring bores, cross bores, o-ring recesses and for polishing and cleaning small bores.

Due to the flexible surface of the bristles the interior brushes suit to the contour of the bore and areas which are hard to reach can be treated. Abrasive bristles also have grinding effects on the side. That allows a rounding of the edges also on cross bores.

Also brushes with **diamond** filling are available, that causes an even more aggressive surface of the brush.

Micro Interior Brushes, Steel Wire
Micro interior brushes with steel wire are used as thread brushes for descaling, deburring or cleaning:

- Cross corners
- Crossovers
- Tap holes
- Slots

The brushes can be used either manually or mechanically.

Please do not hesitate to contact us, we will also find for special applications a compatible solution. Due to a fully automated production, LESSMANN offers high quality to reasonable prices.

Mechanical Application
Only use the brush with the indicated maximal peripheral speed (RPM max.). The max. RPM only is allowed when the brush is clamped min. for 10 mm into the tool. When the brush is inserted into the suitable work piece, higher RPMs are possible. **Only use the brush right rotating.**

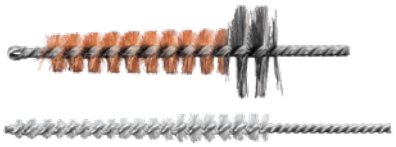

Mikro Interior Brushes are also available with special contours, e. g. **layered cut.**

Microabrasive Interior Brushes IBE, Aluminum Oxide Bristles

D mm | *inch*	GL mm | *inch*	A mm | *inch*	GA mm | *inch*	RPM max.	Pack.	AO 600/0.30 Art.-No.	AO 1000/0.25 Art.-No.
3.2 | *1/8*	125 | *5*	25 | *1*	1.5 | *1/16*	800	10	**541.084**	*540.067*
4.2 | *11/64*	125 | *5*	25 | *1*	2.2 | *3/32*	1,000	10	**541.045**	*540.068*
4.8 | *3/16*	125 | *5*	25 | *1*	2.2 | *3/32*	1,000	10	**541.083**	*540.069*
5.5 | *7/32*	125 | *5*	25 | *1*	2.2 | *3/32*	1,000	10	**541.079**	*540.070*
6.6 | *17/64*	125 | *5*	25 | *1*	2.5 | *3/32*	1,000	10	**541.037**	*540.071*
8.2 | *21/64*	125 | *5*	25 | *1*	3.2 | *1/8*	2,000	10	**541.076**	*540.072*
9.8 | *25/64*	125 | *5*	25 | *1*	3.2 | *1/8*	2,000	10	**541.077**	*540.073*
11.5 | *29/64*	125 | *5*	25 | *1*	3.7 | *5/32*	2,000	10	**541.085**	*540.074*
13 | *33/64*	125 | *5*	25 | *1*	3.7 | *5/32*	2,000	10	**541.087**	*540.075*
17.5 | *11/16*	125 | *5*	25 | *1*	4.7 | *3/16*	2,000	10	**541.039**	
16 | *5/8*	125 | *5*	25 | *1*	3.7 | *5/32*	2,000	10	**541.089**	*540.076*
20 | *51/64*	125 | *5*	25 | *1*	4.7 | *3/16*	2,000	10	**541.093**	*540.077*
25 | *1*	125 | *5*	25 | *1*	4.7 | *3/16*	2,000	10	**541.095**	*540.078*

Microabrasive Interior Brushes IBE, Ceramic Grit

D mm | *inch*	GL mm | *inch*	A mm | *inch*	GA mm | *inch*	RPM max.	Pack.	KK 120/0,60 Art.-Nr.	KK 320/0,60 Art.-Nr.
10 | *13/32*	125 | *5*	65 | *2 9/16*	3.7 | *5/32*	2,000	10	**541.2C1.00**	**543.2C1.00**
13 | *1/2*	125 | *5*	65 | *2 9/16*	3.7 | *5/32*	2,000	10	**541.2C1.30**	**543.2C1.30**
16 | *5/8*	125 | *5*	65 | *2 9/16*	5.2 | *13/64*	2,000	10	**541.2C1.60**	**543.2C1.60**
20 | *25/32*	125 | *5*	65 | *2 9/16*	5.7 | *7/32*	2,000	10	**541.2C2.00**	**543.2C2.00**
25 | *1*	125 | *5*	65 | *2 9/16*	5.7 | *7/32*	2,000	10	**541.2C2.50**	**543.2C2.50**

You can find our **Enquiry Forms** in the respective category under: www.lessmann.com/index.php/en/content/view/full/61 or in the catalog from page 173

Interior Brushes

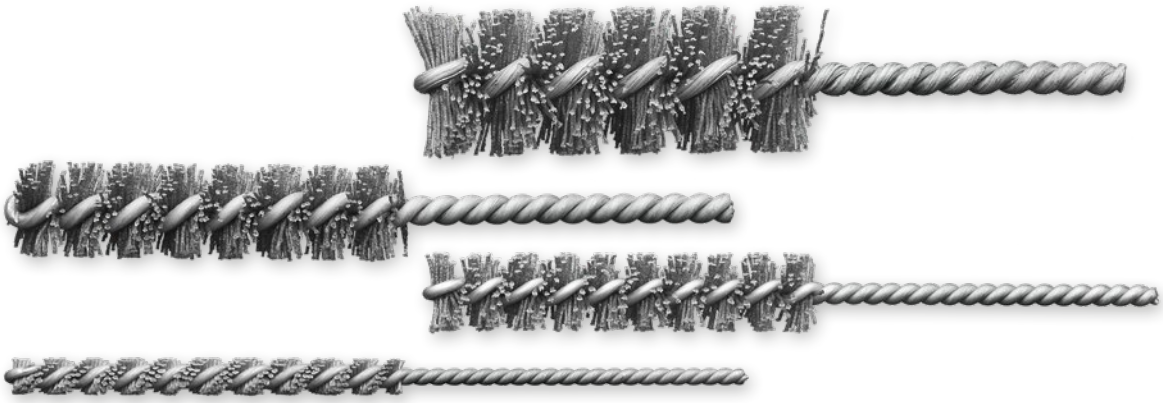

Microabrasive Interior Brushes IBE, Silicon Carbide Bristles

D mm | *inch*	GL mm | *inch*	A mm | *inch*	GA mm | *inch*	RPM max.	Pack.	SIC 120/0.6 Art.-No.	SIC 320/0.6/**0.3 Art.-No.	SIC 1000/0.25 Art.-No.
1.2 | *3/64*	100 | *4*	12 | *15/32*	0.7 | *1/32*	500	10			**545.200.12***
1.9 | *5/64*	100 | *4*	18 | *45/64*	0.7 | *1/32*	500	10			**545.200.19**
2.2 | *3/32*	100 | *4*	18 | *45/64*	0.9 | *1/32*	1,000	10		*543.200.22***	**545.200.22**
2.6 | *7/64*	100 | *4*	25 | *1*	1.0 | *3/64*	1,000	10		*543.200.26***	**545.200.26**
3.2 | *1/8*	100 | *4*	25 | *1*	1.7 | *1/16*	1,000	10		*543.200.32***	**545.200.32**
4.2 | *11/64*	125 | *5*	25 | *1*	2.2 | *3/32*	1,000	10	*541.200.42*	*543.200.42***	**545.200.42**
5.5 | *7/32*	125 | *5*	25 | *1*	2.2 | *3/32*	1,000	10	*541.200.55*	*543.200.55***	**545.200.55**
6 | *15/64*	125 | *5*	65 | *2 9/16*	3.0 | *1/8*	1,500	10	**541.200.60**	**543.200.60**	*545.200.60*
8 | *5/16*	125 | *5*	65 | *2 9/16*	3.0 | *1/8*	1,500	10	**541.200.80**	**543.200.80**	*545.200.80*
10 | *25/64*	125 | *5*	65 | *2 9/16*	3.7 | *9/64*	2,000	10	**541.201.00**	**543.201.00**	*545.201.00*
13 | *33/64*	125 | *5*	65 | *2 9/16*	3.7 | *9/64*	2,000	10	**541.201.30**	**543.201.30**	*545.201.30*
16 | *5/8*	125 | *5*	65 | *2 9/16*	5.2 | *13/64*	2,000	10	**541.201.60**	**543.201.60**	*545.201.60*
19 | *3/4*	125 | *5*	65 | *2 9/16*	5.2 | *13/64*	2,000	10	**541.201.90**	**543.201.90**	*545.201.90*
20 | *51/64*	125 | *5*	65 | *2 9/16*	5.7 | *7/32*	2,000	10	**541.202.00**	**543.202.00**	
22 | *7/8*	125 | *5*	65 | *2 9/16*	5.7 | *7/32*	2,000	10	**541.202.20**	**543.202.20**	*545.202.20*
25 | *1*	125 | *5*	65 | *2 9/16*	5.7 | *7/32*	2,000	10	**541.202.50**	**543.202.50**	*545.202.50*
28 | *1 7/64*	125 | *5*	65 | *2 9/16*	5.7 | *7/32*	2,000	10	**541.202.80**	**543.202.80**	*545.202.80*
30 | *1 3/16*	125 | *5*	65 | *2 9/16*	5.7 | *7/32*	2,000	10	**541.203.00**	**543.203.00**	*545.203.00*
32 | *1 17/64*	125 | *5*	65 | *2 9/16*	5.7 | *7/32*	2,000	10	**541.203.20**	*543.203.20*	*545.203.20*
38 | *1 1/2*	125 | *5*	65 | *2 9/16*	5.7 | *7/32*	2,000	10	**541.203.80**		

* Type IB: with straight / clipped off point

Mechanical Application
Only use the brush with the indicated maximal peripheral speed (RPM max.). The max. RPM only is allowed when the brush is clamped min. for 10 mm into the tool. When the brush is inserted into the suitable work piece, higher RPMs are possible. **Only use the brush right rotating.**

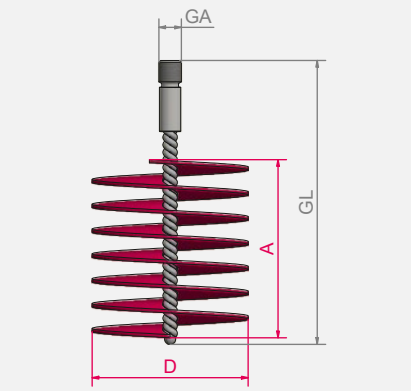

Item Nos. in bold are available ex stock.
Consider our minimum order value for *italic printed* article numbers (see page 178).

STH = steel wire, high tensile, straight
ROH = stainless steel wire, high tensile
MES = brass wire
PA = polyamide
SIC = silicon carbide bristles

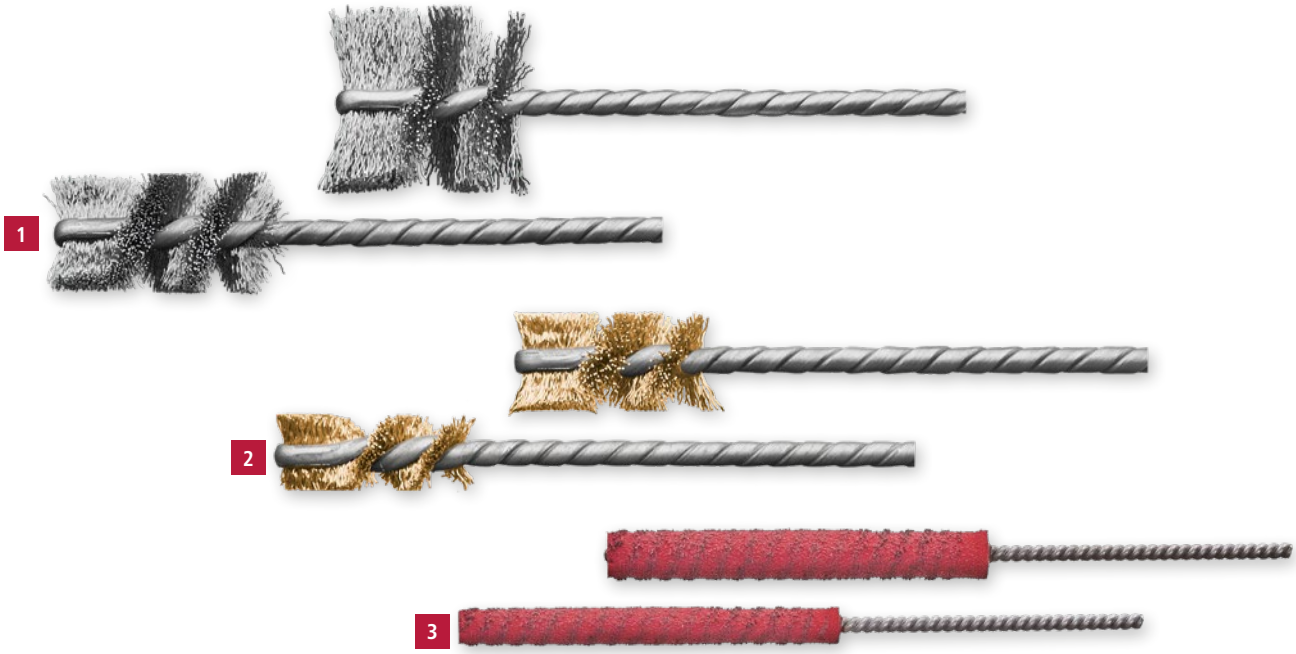

1 Micro Interior Brushes IBH, Steel Wire, Stainless Steel Wire

D mm | *inch*	GL mm | *inch*	A mm | *inch*	GA mm | *inch*	RPM max.	Pack.	**STH 0.12** | *0.005"* Art.-No.	**STH 0.20** | *0.008"* Art.-No.	**ROH 0.12** | *0.005"* Art.-No.	**ROH 0.20** | *0.008"* Art.-No.
6 | *15/64*	90 | *3 1/2*	25 | *1*	3.0 | *1/8*	3,500	10	**564.220.60**			
8 | *5/16*	90 | *3 1/2*	25 | *1*	3.3 | *1/8*	3,500	10	**564.220.80**			
10 | *25/64*	90 | *3 1/2*	25 | *1*	3.8 | *5/32*	3,500	10	**565.321.00**	**565.341.00**	**565.521.00**	
13 | *33/64*	90 | *3 1/2*	25 | *1*	3.8 | *5/32*	3,500	10	**565.321.30**	**565.341.30**	**565.521.30**	
16 | *5/8*	90 | *3 1/2*	25 | *1*	3.8 | *5/32*	3,000	10	**565.321.60**	**565.341.60**	**565.521.60**	*565.541.60*
19 | *3/4*	90 | *3 1/2*	25 | *1*	3.8 | *5/32*	3,000	10	**565.321.90**	**565.341.90**	*565.521.90*	*565.541.90*
20 | *51/64*	90 | *3 1/2*	25 | *1*	3.8 | *5/32*	3,000	10		**565.342.00**		**565.542.00**
21 | *53/64*	90 | *3 1/2*	25 | *1*	3.8 | *5/32*	3,000	10	*565.322.10*	*565.342.10*		
24 | *15/16*	90 | *3 1/2*	25 | *1*	3.8 | *5/32*	3,000	10	*565.322.40*			
25 | *1*	90 | *3 1/2*	25 | *1*	3.8 | *5/32*	3,000	10	**565.322.50**	**565.342.50**	*565.522.50*	**565.542.50**
29 | *1 9/64*	90 | *3 1/2*	25 | *1*	3.8 | *5/32*	3,000	10	*565.322.90*	*565.342.90*		*565.542.90*
32 | *1 17/64*	90 | *3 1/2*	25 | *1*	3.8 | *5/32*	3,000	10	*565.323.20*	*565.343.20*		*565.543.20*

2 Micro Interior Brushes IBH, Brass Wire and Polyamide

D mm | *inch*	GL mm | *inch*	A mm | *inch*	GA mm | *inch*	RPM max.	Pack.	**MES 0.15** | *0.006"* Art.-No.	**MES 0.20** | *0.008"* Art.-No.	**PA 0.30** | *0.012"* Art.-No.
8 | *5/16*	90 | *3 1/2*	25 | *1*	3.2 | *1/8*	3,500	10	*565.730.80*		
10 | *25/64*	90 | *3 1/2*	25 | *1*	3.8 | *5/32*	3,500	10	**565.731.00**		**565.061.00**
13 | *33/64*	90 | *3 1/2*	25 | *1*	3.8 | *5/32*	3,500	10	**565.731.30**		**565.061.30**
16 | *5/8*	90 | *3 1/2*	25 | *1*	3.8 | *5/32*	3,000	10	**565.731.60**		**565.061.60**
20 | *51/64*	90 | *3 1/2*	25 | *1*	3.8 | *5/32*	3,000	10		**565.742.00**	**565.062.00**
25 | *1*	90 | *3 1/2*	25 | *1*	3.8 | *5/32*	3,000	10		**565.742.50**	**565.062.50**

3 Interior Brushes IBE, Encapsulated

D mm | *inch*	GL mm | *inch*	A mm | *inch*	GA mm	RPM max. min^{-1}	Pack.	**STA 0,15** | *0.006"* Art.-Nr.
7 | *1/4*	125 | *5*	65 | *2 1/2*	2,8	1.000	10	**548.304.KG**
9 | *3/8*	125 | *5*	65 | *2 1/2*	2,8	900	10	**548.305.KG**
13 | *33/64*	125 | *5*	65 | *2 1/2*	2,8	900	10	available on demand
15 | *19/32*	125 | *5*	65 | *2 1/2*	2,8	900	10	available on demand

Stainless Steel Brushes
Information on working on stainless steel you find at www.lessmann.com

Cylinder Brushes

Cylinder Brushes
For manual cleaning and deburring of tubes, bores etc. Cylinder brushes are also available in other dimensions and materials. When ordering special sizes please mention full specification: total length, filling length, filling material, diameter and quantity.

Cylinder brushes, flat filament
These flat brushes with fine, crimped steel wire are ideal for cleaning areas which are hard to reach. A typical application is removing isolation rests in channels of stators or electric motors.

Stainless Steel Brushes
Information on working on stainless steel you find at www.lessmann.com

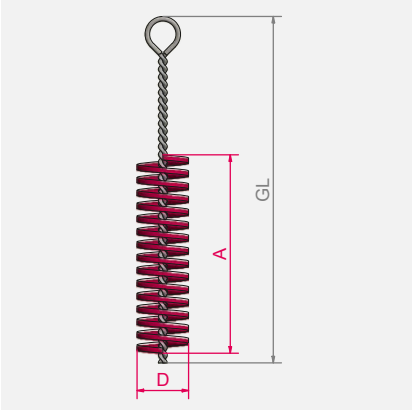

Item Nos. in bold are available ex stock.
Consider our minimum order value for *italic printed* article numbers (see page 178).

STA = steel wire
ROF = stainless steel wire
MES = brass wire
PA = polyamide

5 Cylinder brushes, flat filament with Loop IBZ

D mm | *inch*	GL mm | *inch*	A mm | *inch*	Pack.	STA 0,15 Art.-No.	STA 0,20 Art.-No.
4 x 10 | *5/32 x 25/64*	350 | 14	100 | *4*	10	**559.810**	
7 x 10 | 9/32 x 25/64	350 | 14	100 | *4*	10	**559.806**	
8 x 12 | 5/16 x 15/32	350 | 14	100 | *4*	10		**559.802**
8 x 15 | 5/16 x 19/32	350 | 14	100 | *4*	10		**559.803**
10 x 18 | 25/64 x 45/64	350 | 14	100 | *4*	10		**559.804**
10 x 22 | 25/64 x 7/8	350 | 14	100 | *4*	10		**559.805**
12 x 26 | 15/32 x 1 *1/32*	350 | 14	100 | *4*	10		**559.807**

6 Cylinder brushes, with Loop IBZ, Bronze Wire, fittings brass (low-sparkling)

D mm | *inch*	GL mm | *inch*	A mm | *inch*	Pack.	BRO 0,20 Art.-No.
10 | *25/64*	330 | 13 3/16	100 | *4*	10	**542.034**
20 | 51/64	330 | 13 3/16	100 | *4*	10	**543.006**
35 | 1 3/8	330 | 13 3/16	100 | *4*	10	**543.926**

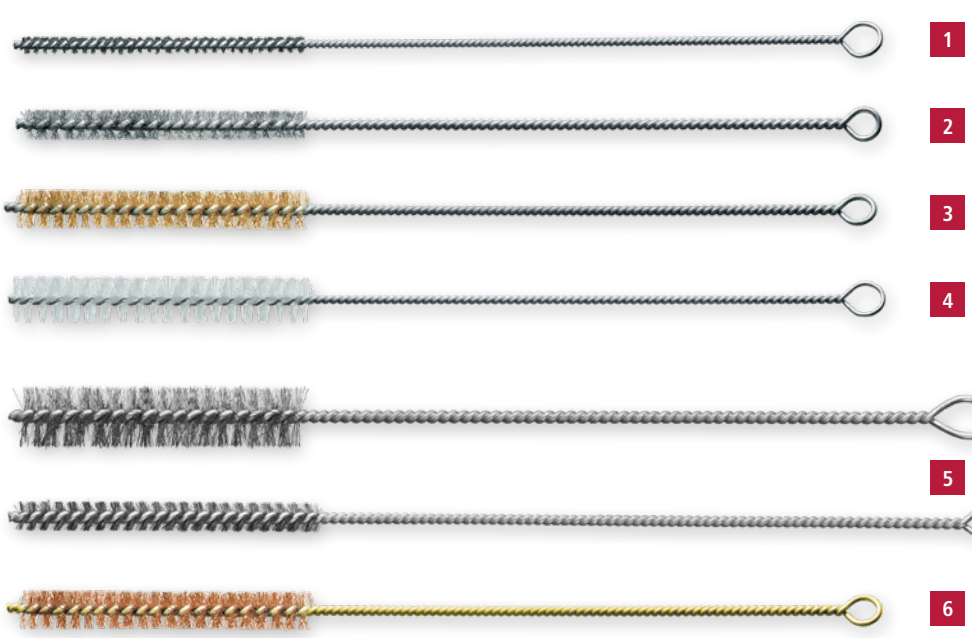

Cylinder Brushes with Loop IBZ

				1	2	3	4
D	GL	A	Pack.	STA	ROF	MES	PA
mm | *inch*	mm | *inch*	mm | *inch*		Art.-No.	Art.-No.	Art.-No.	Art.-No.
3 | *1/8*	300 | *12*	100 | *4*	10	**542.381**	**542.541**	**542.741**	**542.881**
4 | *5/32*	300 | *12*	100 | *4*	10	**542.351**	**542.508**	**542.740**	**542.823**
5 | *13/64*	300 | *12*	100 | *4*	10	**542.347**	**542.538**	**542.739**	**542.822**
6 | *15/64*	300 | *12*	100 | *4*	10	**542.301**	**542.501**	**542.701**	**542.801**
8 | *5/16*	300 | *12*	100 | *4*	10	**542.302**	**542.502**	**542.702**	**542.802**
10 | *25/64*	300 | *12*	100 | *4*	10	**542.303**	**542.503**	**542.703**	**542.803**
12 | *15/32*	300 | *12*	100 | *4*	10	**542.304**	**542.504**	**542.704**	**542.804**
13 | *33/64*	300 | *12*	100 | *4*	10	**542.305**	*542.505*	**542.705**	available on demand
14 | *9/16*	300 | *12*	100 | *4*	10	**542.306**	*542.506*	**542.706**	**542.812**
15 | *19/32*	300 | *12*	100 | *4*	10	**542.307**	**542.507**	**542.707**	**542.807**
16 | *5/8*	300 | *12*	100 | *4*	10	**542.308**	*542.547*	*542.708*	**542.808**
18 | *45/64*	300 | *12*	100 | *4*	10	**542.309**	*542.542*	**542.709**	**542.818**
20 | *51/64*	300 | *12*	100 | *4*	10	**542.311**	**542.511**	**542.711**	**542.811**
25 | *1*	300 | *12*	100 | *4*	10	**542.313**	**542.513**	**542.713**	**542.813**
30 | *1 3/16*	300 | *12*	100 | *4*	10	**542.315**	**542.515**	**542.715**	**542.815**
35 | *1 3/8*	300 | *12*	100 | *4*	10	*542.317*	available on demand	*542.717*	available on demand
40 | *1 5/8*	300 | *12*	100 | *4*	10	**542.319**	*542.519*	**542.719**	**542.819**
50 | *2*	300 | *12*	100 | *4*	10	**542.320**	**542.520**	**542.720**	**542.820**

Cylinder brushes (long version) with Loop IBZ

D	GL	A	Pack.	STA	ROF	MES	PA
mm | *inch*	mm | *inch*	mm | *inch*		Art.-No.	Art.-No.	Art.-No.	Art.-No.
10 | 25/64	500 | 20	100 | 4	10	**547.303**	available on demand	**547.703**	**547.803**
15 | *19/32*	500 | 20	100 | 4	10	**547.307**	available on demand	**547.707**	**547.807**
20 | *51/64*	500 | 20	100 | 4	10	**547.311**	available on demand	**547.711**	**547.811**
25 | *1*	500 | 20	100 | 4	10	**547.313**	available on demand	**547.713**	**547.813**
30 | *1 3/16*	500 | 20	100 | 4	10	**547.315**	available on demand	**547.715**	**547.815**

Hole Cleaning Brushes

1 2 3 4 5

Hole cleaning Brushes with Wooden Handle IBM

	D mm | *inch*	GL mm | *inch*	A mm | *inch*	Filling Dia.	Pack.	1 STA Art.-No.	2 ROF Art.-No.	3 MES Art.-No.
	10 | *25/64*	300 | *12*	100 | *4*	0.15	10	**560.310**	**560.510**	**560.710**
	15 | *19/32*	300 | *12*	100 | *4*	0.20	10	**560.315**	**560.515**	**560.715**
	20 | *51/64*	300 | *12*	100 | *4*	0.20	10	**560.320**	**560.520**	**560.720**
	25 | *1*	300 | *12*	100 | *4*	0.25	10	**560.325**	**560.525**	**560.725**
	30 | *1 3/16*	300 | *12*	100 | *4*	0.25	10	**560.330**	**560.530**	**560.730**
4	10/18 | *25/64 / 45/64*	200 | *8*	70 | *2 3/4*	0.15	10	**561.304***		

* conical filling

5 Cylinder Brushes with Shank 8 mm Ø IBG

D mm | *inch*	GL mm | *inch*	A mm | *inch*	Filling Dia.	RPM max.	Pack.	STA Art.-No.
13 | *33/64*	200 | *8*	55 | *2 11/64*	0.15	1.000	10	**503.311**
20 | *51/64*	200 | *8*	55 | *2 11/64*	0.20	1.000	10	**503.313**
26 | *1 1/32*	200 | *8*	55 | *2 11/64*	0.25	800	10	**503.314**
32 | *1 17/64*	200 | *8*	55 | *2 11/64*	0.25	800	10	**503.316**
38 | *1 1/2*	200 | *8*	55 | *2 11/64*	0.30	800	10	**503.318**

Hole Cleaning Brushes

Those hole cleaning brushes have a wooden handle. Hence the brushes allow a very comfortable working in various application fields.

Typically the brushes are used in construction industry or handcraft business for cleaning bore holes or slots.

Besides, Hole Cleaning Brushes are ideal for cleaning threads or deburring cross holes.

Mechanical Application

Only use the brush with the indicated maximal peripheral speed (RPM max.). The max. RPM only is allowed when the brush is clamped min. for 10 mm into the tool. When the brush is inserted into the suitable work piece, higher RPMs are possible. **Only use the brush right rotating.**

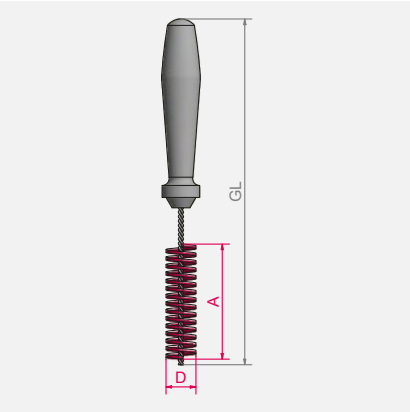

Bore Hole Cleaning Brushes

Interior Brushes for bore hole cleaning IBE, Steel, without Thread

D mm | *inch*	GL mm | *inch*	A mm | *inch*	Suitable for bore hole mm | *inch*	RPM max.	Pack.	**STA 0.10** | *0.004"* Art.-No.	**STA 0.15** | *0.006"* Art.-No.	**STA 0.20** | *0.008"* Art.-No.
12 | *15/32*	130 | *5 1/8*	80 | *3*	10 | *25/64*	1,500	10	**504.301**		
14 | *9/16*	140 | *5 1/2*	80 | *3*	12 | *15/32*	1,500	10	**504.302**		
16 | *5/8*	180 | *7*	80 | *3*	14 | *9/16*	800	10		**504.333**	
20 | *51/64*	200 | *8*	100 | *4*	18 | *45/64*	800	10		**504.334**	
24 | *15/16*	220 | *8 5/8*	100 | *4*	22 | *7/8*	800	10		**504.335**	
26 | *1 1/32*	250 | *10*	100 | *4*	24 | *15/16*	500	10			**504.346**
28 | *1 7/64*	290 | *11 3/8*	100 | *4*	26 | *1 1/32*	500	10			**504.347**

Bore Hole Cleaning Brushes IBG, Stainless Steel, with Thread

D mm | *inch*	GL mm | *inch*	A mm | *inch*	Suitable for bore hole mm | *inch*	GA	Pack.	**ROF 0.12** | *0.004"* Art.-No.	**ROF 0.15** | *0.006"* Art.-No.	**ROF 0.20** | *0.008"* Art.-No.
12 | *15/32*	130 | *5 1/8*	80 | *3*	10 | *25/64*	M 6	10	**504.501.06**		
14 | *9/16*	140 | *5 1/2*	80 | *3*	12 | *15/32*	M 6	10	**504.502.06**		
16 | *5/8*	180 | *7*	80 | *3*	14 | *9/16*	M 6	10	**504.533.06**		
18 | *45/64*	200 | *8*	100 | *4*	16 | *5/8*	M 6	10		*504.532.06*	
20 | *51/64*	200 | *8*	100 | *4*	18 | *45/64*	M 6	10		**504.534.06**	
22 | *7/8*	220 | *8 5/8*	100 | *4*	20 | *51/64*	M 6	10		*504.536.06*	
24 | *15/16*	220 | *8 5/8*	100 | *4*	22 | *7/8*	M 6	10		**504.535.06**	
26 | *1 1/32*	250 | *10*	100 | *4*	24 | *15/16*	M 6	10			**504.546.06**
28 | *1 7/64*	290 | *11 3/8*	100 | *4*	26 | *1 1/32*	M 6	10			**504.547.06**
31 | *1 1/4*	260 | *10 3/8*	100 | *4*	29 | *1 9/64*	M 6	10			*504.548.06*
33 | *1 1/4*	350 | *14*	100 | *4*	31 | *1 1/4*	M 6	10			*504.549.06*
35 | *1 3/8*	350 | *14*	100 | *4*	33 | *1 1/4*	M 6	10			*504.550.06*
38 | *1 1/2*	350 | *14*	100 | *4*	36 | *1 1/2*	M 6	10			*504.551.06*
43 | *2*	350 | *14*	100 | *4*	41 | *1 39/64*	M 6	10			*504.552.06*

Bore Hole Cleaning Brushes
These interior brushes are used in the mounting techniques. The brushes are ideal for cleaning bore holes in most different materials. Afterwards screws and anchors can be inserted easily in the bore hole.

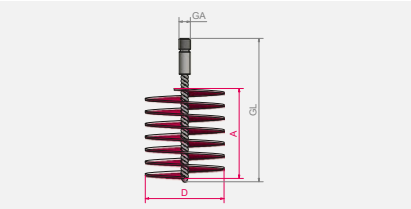

Item Nos. in bold are available ex stock.
Consider our minimum order value for *italic printed* article numbers (see page 178).

STA = steel wire
ROF = stainless steel wire
MES = brass wire

Tube and Sleeve Brushes

Interior Brushes
These brushes are varied for many different uses: not only for cleaning of tubes, gratings, sleeves and cylinders. Interior brushes regulate current velocity in tubing systems. They are similar to the double spiral tube brushes for deburring cross drillings etc. On these pages are shown standard brushes, single spiral having two drilling wires and the double spiral having four.

Sleeve Brushes
Sleeve brushes have a double spiral and are particularly stable types of tube brushes whose trimming is cut to a conical point. Used in machines they are beneficial for cleaning the sleeves (internal threads) of containers, e.g. after galvanisation.

Mechanical Application
Only use the brush with the indicated maximal peripheral speed (RPM max.). The max. RPM only is allowed when the brush is clamped min. for 10 mm into the tool. When the brush is inserted into the suitable work piece, higher RPMs are possible. **Only use the brush right rotating.**

Brushes with doublespiral
Brushes with a double spiral are mainly used for the treatment of larger diameters or for the treatment of hard materials. A double spiral is more stable and has a higher resistance against untwisting. Hence the brushes can be exposed to higher loads.

Stainless Steel Brushes
Information on working on stainless steel you find at www.lessmann.com

Special diameters
Minimum order € 125.00
Extra charge: Gross per piece
10 – 49 pcs + 50 %
50 – 99 pcs + 25 %
100 pcs and more + 10 %

Special threads under reserve
Extra charge: Gross per piece
10 – 19 pcs + € 5.00
20 – 49 pcs + € 4.00
50 – 99 pcs + € 3.00
100 pcs and more + € 2.00

Suitable thread adapter
see on page 127
Handles and Extension Pieces
see on page 127

On request tube brushes are also available with other measurements, other filling materials or other threads.

Item Nos. in bold are available ex stock.
Consider our minimum order value for *italic printed* article numbers (see page 178).

STA	= steel wire
ROF	= stainless steel wire
MES	= brass wire
PA	= polyamide
SIC	= silicon carbide bristles

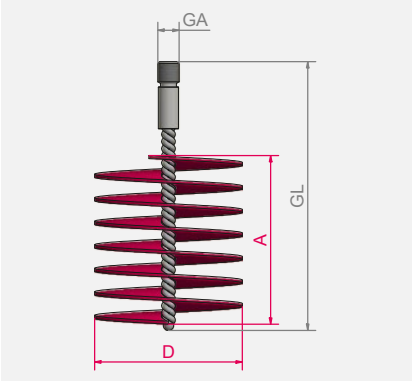

2-sided cropped

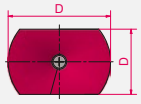

on request also 4-sided cropped

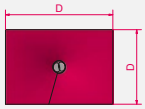

1

2

3

4

Matching handles can be found on page 127

Tube Brushes with external Thread IBG

D	GL	A	GA	RPM	Pack.	1 STA crimped Art.-No.	1 ROF crimped Art.-No.	2 MES crimped Art.-No.	3 PA straight Art.-No.
Single Spirale									
mm | *inch*	mm | *inch*	mm | *inch*							
6 | *15/64*	115 | *4 1/2*	80 | *3*	M 4	2,000	10	**501.301**	**501.501**	**501.701**	**501.801**
8 | *5/16*	115 | *4 1/2*	80 | *3*	M 6	3,000	10	**500.308**	**500.508**	**500.708**	**500.808**
10 | *25/64*	115 | *4 1/2*	80 | *3*	M 6	3,000	10	**500.310**	**500.510**	**500.710**	**500.810**
12 | *15/32*	115 | *4 1/2*	80 | *3*	M 6	3,000	10	**500.312**	**500.512**	**500.712**	**500.812**
13 | *33/64*	115 | *4 1/2*	80 | *3*	M 6	3,000	10	**500.313**	**500.513**	**500.713**	**500.813**
14 | *9/16*	115 | *4 1/2*	80 | *3*	M 6	3,000	10	**500.314**	**500.514**	**500.714**	**500.814**
15 | *19/32*	115 | *4 1/2*	80 | *3*	M 6	3,000	10	**500.315**	**500.515**	**500.715**	**500.815**
16 | *5/8*	115 | *4 1/2*	80 | *3*	M 6	3,000	10	**500.316**	**500.516**	**500.716**	**500.816**
18 | *45/64*	115 | *4 1/2*	80 | *3*	M 6	3,000	10	**500.318**	**500.518**	**500.718**	**500.818**
19 | *3/4*	115 | *4 1/2*	80 | *3*	M 6	3,000	10	**500.319**	**500.519**	**500.719**	*500.819*
20 | *51/64*	115 | *4 1/2*	80 | *3*	M 6	3,000	10	**500.320**	**500.520**	**500.720**	**500.820**

4 Interior Brushes with external thread IBG, Silicon Carbid Bristles

D	GL	A	GA	RPM	Pack.	SIC 180/1.0 Art.-No.
Single Spirale						
mm | *inch*	mm | *inch*	mm | *inch*				
10 | *25/64*	115 | *4 1/2*	80 | *3*	M 6	4,000	10	*500.010*
16 | *5/8*	115 | *4 1/2*	80 | *3*	M 6	4,000	10	*500.016*
20 | *51/64*	150 | *6*	100 | *4*	W 1/2"	3,500	10	**502.050.24**
22 | *7/8*	150 | *6*	100 | *4*	W 1/2"	3,500	10	*502.052.24*
25 | *1*	150 | *6*	100 | *4*	W 1/2"	3,500	10	*502.055.24*
28 | *1 7/64*	150 | *6*	100 | *4*	W 1/2"	3,500	10	*502.058.24*

For all brushes with thread M 6, M 10 and W 1/2" a practical hanger assembly is available for presenting the brushes individually. More information you find on page 137.

Tube/Sleeve brushes

1

3

5

2

4

Matching handles can be found on page 127

Tube Brushes with external Thread W 1/2"

				1	2	3	4	5	
				Single Spirale IBG				Double Spirale IBGD	
D	GL	A	Pack.	RPM	STA straight	ROF straight	MES crimped	PA straight	RPM	STA straight
mm	mm	mm	mm	max.	Art.-No.	Art.-No.	Art.-No.	Art.-No.	max.	Art.-No.
20	150	100	10	2,500	**502.120.24**	**502.420.24**	**502.720.24**	**502.820.24**	2,000	**522.120.24**
22	150	100	10	2,500	**502.122.24**	**502.422.24**	**502.722.24**	**502.822.24**	2,000	**522.122.24**
25	150	100	10	2,500	**502.125.24**	**502.425.24**	**502.725.24**	**502.825.24**	2,000	**522.125.24**
28	150	100	10	2,500	**502.128.24**	**502.428.24**	**502.728.24**	*502.828.24*	2,000	**522.128.24**
30	160	100	10	1,000	**506.130**	**506.430**	**506.730**	**506.830**	1,500	**526.130**
32	160	100	10	1,000	**506.132**	**506.432**	**506.732**	**506.832**	1,500	**526.132**
35	160	100	10	1,000	**506.135**	**506.435**	**506.735**	**506.835**	1,500	**526.135**
38	160	100	10	1,000	**506.138**	**506.438**	**506.738**	**506.838**	1,500	**526.138**
40	160	100	10	1,000	**506.140**	**506.440**	**506.740**	**506.840**	1,500	**526.140**
44	160	100	5	1,000	**506.144**	**506.444**	**506.744**	**506.844**	1,500	**526.144**
50	160	100	5	1,000	**506.150**	**506.450**	**506.750**	**506.850**	1,500	**526.150**
57	160	100	5	1,000	**506.157**	**506.457**	**506.757**	**506.857**	1,500	**526.157**
63	160	100	5	1,000	**506.163**	**506.463**	**506.763**	**506.863**	1,500	**526.163**
69	160	100	5	1,000	**506.169**	*506.469*	**506.769**	**506.869**	1,500	**526.169**
75	160	100	5	1,000	**506.175**	**506.475**	**506.775**	**506.875**	1,500	**526.175**
82	160	100	5	1,000	**506.182**	**506.482**	**506.782**	**506.882**	1,500	**526.182**
88	160	100	5	1,000	**506.188**	*506.488*	*506.788*	**506.888**	1,500	**526.188**
94	160	100	5	1,000	**506.194**	*506.494*	*506.794*	**506.894**	1,500	**526.194**
101	160	100	5	1,000	**506.101**	**506.401**	**506.701**	**506.801**	1,500	**526.101**
125	160	100	5	1,000	**506.106**	**506.406**	**506.706**	*506.806*	1,500	**526.106**
150	160	100	5	1,000	**506.211**	**506.411**	**506.711**	**506.811**	1,000	*526.111*
200	160	100	5	1,000	**506.220**	available on demand	*506.720*	**506.820**	1,000	available on demand

Mechanical Application
Only use the brush with the indicated maximal peripheral speed (RPM max.). The max. RPM only is allowed when the brush is clamped min. for 10 mm into the tool. When the brush is inserted into the suitable work piece, higher RPMs are possible. **Only use the brush right rotating.**

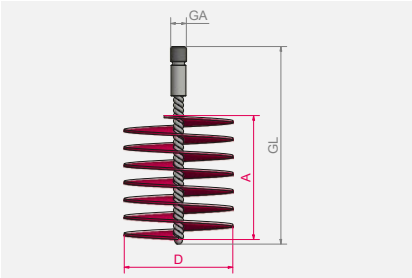

Item Nos. in bold are available ex stock.
Consider our minimum order value for *italic printed* article numbers (see page 178).

STA = steel wire
ROF = stainless steel wire
MES = brass wire
PA = polyamide

1 3 2

Tube Brushes with internal Thread / Boiler Brushes IBG

	D mm | *inch*	Format	GL mm | *inch*	A mm | *inch*	GA	RPM max.	Pack.	STA straight Art.-No.	PA straight Art.-No.
	Single Spirale								
1	30 | *1 3/16*	round	160 | *6 1/4*	100 | *4*	M 10i	1,000	10	*506.130.60*	
	40 | *1 5/8*	round	160 | *6 1/4*	100 | *4*	M 10i	1,000	10	*506.140.60*	
	50 | *2*	round	160 | *6 1/4*	100 | *4*	M 10i	1,000	10	*506.150.60*	
	60 | *2 3/8*	round	160 | *6 1/4*	100 | *4*	M 10i	1,000	10	*506.160.60*	
	80 | *3*	round	160 | *6 1/4*	100 | *4*	M 10i	1,000	10	*506.180.60*	
	90 | *3 1/2*	round	160 | *6 1/4*	100 | *4*	M 10i	1,000	10	**507.190**	
	101 | *4*	round	160 | *6 1/4*	100 | *4*	M 10i	1,000	10	*506.101.60*	
	120 | *4 3/4*	round	160 | *6 1/4*	100 | *4*	M 10i	1,000	10	**507.105**	*506.805.60*
2	20 x 30 | *51/64 x 1 3/16*	2-sided cropped	140 | *5 1/2*	80 | *3*	M 10i		10	**533.405**	
	15 x 30 | *19/32 x 1 3/16*	2-sided cropped	160 | *6 1/4*	100 | *4*	M 10i		10	*533.408*	
	30 x 50 | *1 3/16 x 2*	2-sided cropped	160 | *6 1/4*	100 | *4*	M 10i		10	*532.218.60*	
	40 x 90 | *1 5/8 x 3 1/2*	2-sided cropped	160 | *6 1/4*	100 | *4*	M 10i		10	*532.214.60*	
	50 x 100 | *2 x 4*	2-sided cropped	160 | *6 1/4*	100 | *4*	M 10i		10	*532.303.60*	

Suitable back board brushes you find at page 125.

round | 2-sided cropped | on request also 4-sided cropped

Sleeves Brushes Conical, without Thread

	D mm | *inch*	GL mm | *inch*	A mm | *inch*	RPM max.	Pack.	Single Spirale IBE STA crimped Art.-No.	Double Spirale IBD STA straight Art.-No.
3	10-20 | *25/64 - 51/64*	170 | *6 3/4*	100 | *4*	1,000	10	**541.372**	**549.101**
	15-25 | *19/32 - 1*	170 | *6 3/4*	100 | *4*	1,000	10	**540.321**	**549.102**
	20-30 | *51/64 - 1 3/16*	170 | *6 3/4*	100 | *4*	1,000	10	**541.373**	**549.103**
	25-35 | *1 - 1 3/8*	170 | *6 3/4*	100 | *4*	1,000	10	**540.323**	**549.104**
	32-42 | *1 17/64 -1 5/8*	170 | *6 3/4*	100 | *4*	1,000	5	**540.324**	**549.105**
	40-50 | *1 5/8 - 2*	170 | *6 3/4*	100 | *4*	1,000	5	**540.325**	**549.106**
	38-70 | *1 1/2 - 2 3/4*	170 | *6 3/4*	100 | *4*	1,000	5	*540.225*	**549.107**
	60-95 | *2 3/8 - 3 3/4*	170 | *6 3/4*	100 | *4*	1,000	5	**540.327**	**549.108**

On request also tube and sleeve brushes with crimped wire are available.

Boiler Brushes / Stove Pipe Brushes

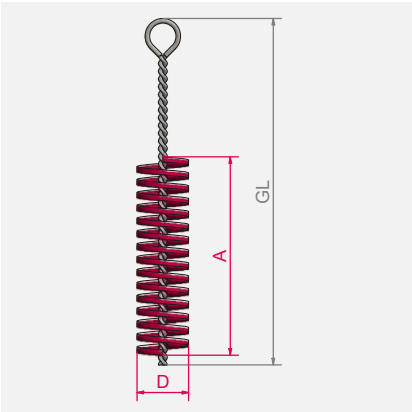

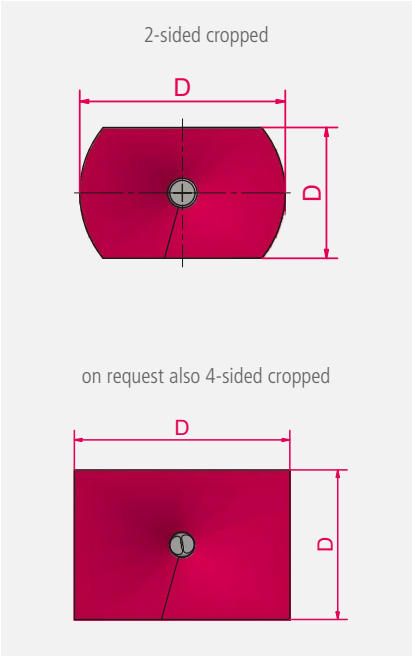

Boiler Brushes
The systematic care of boilers and regular cleaning by brushing increases the boiler efficiency and reduces toxic emissions.

LESSMANN boiler brushes are of outstanding quality made using the best materials and precise manufacturing procedures. Our current programme includes brushes in standard dimensions and special executions. As OEM supplier to important boiler manufacturers we are able to produce large quantities in an efficient way. What is even more important is our know how in meeting the critical tolerances demanded by our customers.

Stove Pipe Brushes
The stove pipe brushes are available in two different executions: with twisted handle (brush and handle one part) or with external thread, for screwing and lengthing by using a separate handle.

Handles and Extension Pieces
For tube brushes, boiler brushes and stove pipe brushes, see pages 118 et seq.
The twisted handles have an internal thread and a grip loop, the extension pieces have both an internal thread and an external thread.

Suitable Thread Adapters
see page 127

Item Nos. in bold are available ex stock.
Consider our minimum order value for *italic printed* article numbers (see page 178).

STA	= steel wire
PA	= polyamide

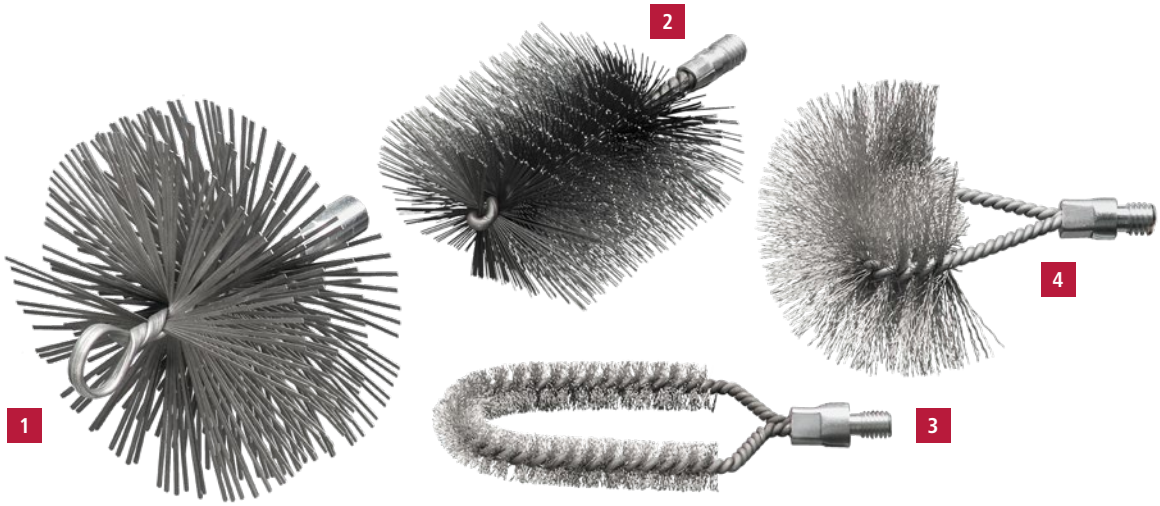

EAN

1 Chimney Brushes with Eye and internal Thread IBZG, Flat Wire 2.0 x 0.40

Filling	D	GL	A	Internal Thread	Pack	Art.-No.
STA flat	125	160	55	M 12 i	1	**507.007**
STA flat	150	160	55	M 12 i	1	**507.001**
STA flat	175	160	55	M 12 i	1	**507.002**
STA flat	200	160	55	M 12 i	1	**507.003**

Filling	D	GL	A	Internal Thread	Pack	Art.-No.
STA flat	250	160	55	M 12 i	1	**507.004**
STA flat	300	160	55	M 12 i	1	**507.005**
STA flat	350	160	55	M 12 i	1	**507.006**

Boiler Brushes with external Thread IBG, Steel Wire, rectangular/curved

	Filling	D mm | *inch*	Format	GL mm | *inch*	A mm | *inch*	GA/GI	Pack.	Art.-No.
2	**PA** straight	30 x 50 | *1 3/16 x 2*	(•)	160 | *6 3/8*	100 | *4*	W 1/2"	5	**533.008.24**
2	**PA** straight	50 x 100 | *2 x 4*	(•)	160 | *6 3/8*	100 | *4*	W 1/2"	5	*533.010.24*
2	**STA** straight	30 x 50 | *1 3/16 x 2*	(•)	160 | *6 3/8*	100 | *4*	W 1/2"	5	**532.218**
2	**STA** straight	30 x 80 | *1 3/16 x 3*	(•)	160 | *6 3/8*	100 | *4*	W 1/2"	5	**532.211**
2	**STA** straight	40 x 80 | *1 5/8 x 3*	(•)	160 | *6 3/8*	100 | *4*	W 1/2"	5	**532.202**
2	**STA** straight	50 x 100 | *2 x 4*	(•)	160 | *6 3/8*	100 | *4*	W 1/2"	5	**532.203**
2	**STA** straight	50 x 120 | *2 x 4 3/4*	(•)	160 | *6 3/8*	100 | *4*	W 1/2"	5	**532.205**
3	**STA** crimped	18 x 70 | *45/64 x 2 3/4*	curved	160 | *6 3/8*	100 | *4*	W 1/2"	5	**529.301.24**
3	**STA** crimped	30 x 80 | *1 3/16 x 3*	curved	175 | *6 7/8*	120 | *4 3/4*	W 1/2"	5	**529.302**
4	**STA** crimped	80 x 150 | *3 x 6*	curved	150 | *6*	120 | *4 3/4*	W 1/2"	5	**529.311**
4	**PA** straight	80 x 150 | *3 x 6*	curved	150 | *6*	120 | *4 3/4*	W 1/2"	5	*529.811*
4	**STA** crimped	80 x 150 | *3 x 6*	curved	150 | *6*	120 | *4 3/4*	M 10i	5	*529.311.60*

(•) 2-sided cropped
on request also 4-sided cropped

Boiler Brushes

1 2 3

Boiler Brushes with Handle IBZ

	Filling	D mm | *inch*	Format	GL mm | *inch*	A mm | *inch*	Pack.	Art.-No.
1	**PA** straight	20 | *51/64*	⊙	600 | *23 5/8*	100 | *4*	10	**544.804**
2	**STA** crimped	50 | *2*	⊙	700 | *27 1/2*	100 | *4*	10	**544.301**
2	**STA** crimped	90 | *3 1/2*	⊙	600 | *23 5/8*	100 | *4*	10	*544.302*
2	**STA** crimped	10 | *25/64*	⊙	850 | *33 1/2*	100 | *4*	10	**545.320**
2	**STA** crimped	15 | *19/32*	⊙	850 | *33 1/2*	100 | *4*	10	*545.321*
2	**STA** crimped	20 | *51/64*	⊙	850 | *33 1/2*	100 | *4*	10	**545.322**
2	**STA** crimped	25 | *1*	⊙	850 | *33 1/2*	100 | *4*	10	**545.307**
2	**STA** crimped	35 | *1 3/8*	⊙	850 | *33 1/2*	100 | *4*	10	**545.311**
2	**STA** crimped	50 | *2*	⊙	850 | *33 1/2*	100 | *4*	10	**545.312**
2	**STA** crimped	60 | *2 3/8*	⊙	850 | *33 1/2*	100 | *4*	10	**545.338**
3	**PA** straight	12 x 14 | *15/32 x 9/16*	⬭	600 | *23 5/8*	150 | *6*	10	**554.903**
3	**STA** straight	17 x 50 | *43/64 x 2*	⬭	960 | *38*	60 | *2 3/8*	10	**564.101****
3	**STA** crimped	30 x 50 | *1 3/16 x 2*	⬭	800 | *31 1/2*	100 | *4*	10	**551.801**
3	**STA** crimped	40 x 50 | *1 5/8 x 2*	⬭	1,000 | *39 3/8*	80 | *3*	10	**553.711**
3	**STA** straight	40 x 80 | *1 5/8 x 3*	⬭	1,000 | *39 3/8*	100 | *4*	10	**552.404**
3	**STA** crimped	40 x 90 | *1 5/8 x 3 1/2*	⬭	1,000 | *39 3/8*	80 | *3*	10	*564.301**
3	**STA** straight	50 x 100 | *2 x 4*	⬭	1,000 | *39 3/8*	100 | *4*	10	**552.403**

* Rod made from spring steel Ø 5 mm | ** with scooped scratcher in the handle

⬭ 2-sided cropped | on request also 4-sided cropped

⊙ round

Item Nos. in bold are available ex stock.
Consider our minimum order value for *italic printed* article numbers (see page 178).

STA = steel wire

PA = polyamide

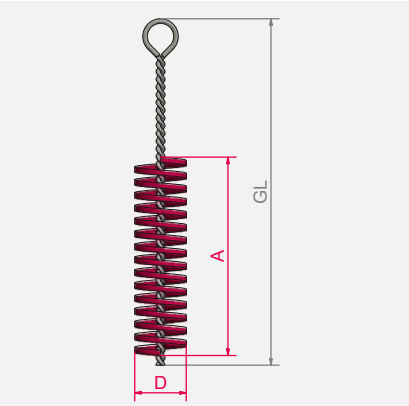

2-sided cropped

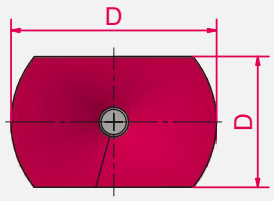

on request also 4-sided cropped

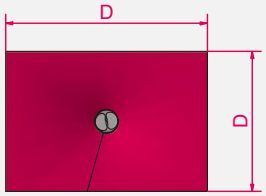

Boiler Brushes-Sets

EAN **1 Brush Set, 5 pieces**

			Set with handle, big edition, steel wire				Set with handle, small edition, steel wire			
Content: 1 piece each	A	Format	Art.-No.	D	GL	Art.-No. Set	Art.-No.	D	GL	Art.-No. Set
Cylinder Brush	100	⊙	545.303	38	1.000	**599.921**	544.307	15	600	**599.931**
Cylinder Brush	100	⊙	545.331	100	1.000		544.361	25	800	
Boiler Brush	100	⊙	552.811	30 x 70	1.000		559.831	31 x 20	600	
Boiler Brush	100	⊙	552.816	50 x 100	1.000		551.811	30 x 20	500	
Boiler Brush	100	flat filament	559.713	75 x 30	1.000		551.812	50 x 40	700	

EAN **2 Brush Set, Steel Wire, external Thread W 1/2", crimped, 9 pieces**

Content: 1 piece each		D mm | *inch*	GL mm | *inch*	A mm | *inch*	Format	Art.-No. Set
506.330	Interior Brushes	30 | *1 3/16*	160 | *6 1/4*	100 | *4*	⊙	**599.962**
506.340	Interior Brushes	40 | *1 5/8*	160 | *6 1/4*	100 | *4*	⊙	
506.363	Interior Brushes	63 | *2 1/2*	160 | *6 1/4*	100 | *4*	⊙	
532.718	Boiler Brush	30 x 50 | *1 3/16 x 2*	160 | *6 1/4*	100 | *4*	⊙	
532.716	Boiler Brush	30 x 90 | *1 3/16 x 3 1/2*	160 | *6 1/4*	100 | *4*	⊙	
532.703	Boiler Brush	50 x 100 | *2 x 4*	160 | *6 1/4*	100 | *4*	⊙	
529.311	Back board brush	80 x 150 | *3 x 6*	150 | *6*			
567.671	Handle with Eye		500 | *20*			
567.771	Extension		500 | *20*			

EAN **Brush Set, Polyamide Bristles, external Thread W 1/2", crimped, 9 pieces**

Content: 1 piece each		D mm | *inch*	GL mm | *inch*	A mm | *inch*	Format	Art.-No. Set
506.838	Interior Brushes	38 | *1 1/2*	160 | *6 1/4*	100 | *4*	⊙	**599.991**
506.855	Interior Brushes	55 | *2 1/4*	160 | *6 1/4*	100 | *4*	⊙	
506.860	Interior Brushes	60 | *2 3/8*	160 | *6 1/4*	100 | *4*	⊙	
533.008.24	Boiler Brush	30 x 50 | *1 3/16 x 2*	160 | *6 1/4*	100 | *4*	⊙	
533.009.24	Boiler Brush	30 x 90 | *1 3/16 x 3 1/2*	160 | *6 1/4*	100 | *4*	⊙	
533.010.24	Boiler Brush	50 x 100 | *2 x 4*	160 | *6 1/4*	100 | *4*	⊙	
529.811	Back board brush	80 x 150 | *3 x 6*	150 | *6*			
567.671	Handle with Eye		500 | *20*			
567.771	Extension		500 | *20*			

Stove Pipe Brushes

Stove Pipe Brushes with Twisted Handle IBZ

	Filling	D mm | *inch*	GL mm | *inch*	A mm | *inch*	Pack.	Art.-No.
1	**STM**	130 | *5 1/8*	2,000 | *78 3/4*	200 | *8*	10	**546.302**
	STM	150 | *6*	2,000 | *78 3/4*	200 | *8*	10	**546.306**
	STM	180 | *7*	2,000 | *78 3/4*	200 | *8*	10	**546.314**
	STM	200 | *8*	2,000 | *78 3/4*	200 | *8*	10	**546.318**
2	**BAS**	150 | *6*	2,000 | *78 3/4*	200 | *8*	10	**546.906**

Delivery only in noted packaging unit. If you need smaller quantities, please order stove pipe brushes with separate handle.

3 Stove Pipe Brushes with external thread, separate Handle IBZG

Filling	D mm | *inch*	GL mm | *inch*	A mm | *inch*	GA	Pack.	Art.-No.
STM	80 | *3*	275 | *10 7/8*	200 | *8*	M 10	5	**507.307**
STM	100 | *4*	275 | *10 7/8*	200 | *8*	M 10	5	**507.308**
STM	130 | *5 1/8*	275 | *10 7/8*	200 | *8*	M 10	5	**507.301**
STM	150 | *6*	275 | *10 7/8*	200 | *8*	M 10	5	**507.302**
STM	160 | *6 3/8*	275 | *10 7/8*	200 | *8*	M 10	5	**507.303**
STM	180 | *7*	275 | *10 7/8*	200 | *8*	M 10	5	**507.304**
STM	200 | *8*	275 | *10 7/8*	200 | *8*	M 10	5	**507.305**
BAS	150 | *6*	275 | *10 7/8*	200 | *8*	M 10	5	**507.959**

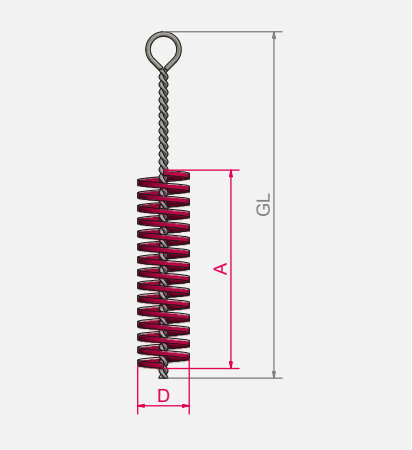

Item Nos. in bold are available ex stock.
Consider our minimum order value for *italic printed* article numbers (see page 178).

STM = brass coated steel

BAS = bassine black

Accessories

Handle with Eye

	GL mm | *inch*	GI/GA	Format	Pack.	Art.-No.
1	400 | *16*	External M 10	round steel, straight	1	**568.805**
1	800 | *31 1/2*	External M 10	round steel, straight	1	**568.802**
1	1,000 | *40*	External M 10	round steel, straight	1	**568.806**
EAN 2	1,000 | *40*	Internal M 4	twisted wire	1	**566.603**
EAN 2	1,000 | *40*	Internal M 6	twisted wire	1	**566.601**
EAN 2	1,000 | *40*	Internal M 10	twisted wire	1	**566.602**
EAN 2	1,000 | *40*	External M 12	twisted wire	1	**567.201**
2	500 | *20*	Internal W 1/2"	twisted wire	1	**567.671**
EAN 2	1,000 | *40*	Internal W 1/2"	twisted wire	1	**567.601**

3 Extension

	GL mm | *inch*	GI/GA	Format	Pack.	Art.-No.
EAN	1,000 | *40*	Internal / External M 4	twisted wire	1	**566.703**
EAN	200 | *8*	Internal / External M 6	twisted wire	1	**566.707.01**
EAN	1,000 | *40*	Internal / External M 6	twisted wire	1	**566.701**
EAN	1,000 | *40*	Internal / External M 10	twisted wire	1	**566.702**
EAN	1,000 | *40*	Internal / External M 12	twisted wire	1	**567.731**
	500 | *20*	Internal / External W 1/2"	twisted wire	1	**567.771**
EAN	1,000 | *40*	Internal / External W 1/2"	twisted wire	1	**567.701**

EAN

Adapter Threads

			GL mm | *inch*	Pack.	Art.-No.
4	Internal W 1/2"	Internal M 12	40 | *1 3/8*	1	**001.211**
4	Internal W 1/2"	Internal M 10	40 | *1 3/8*	1	**001.212**
4	Internal W 3/8"	Internal M 10	40 | *1 3/8*	1	*001.215*
4	External M 10	Internal W 1/2"	40 | *1 3/8*	1	**001.222**
4	External M 10	Internal W 3/8"	40 | *1 3/8*	1	**001.225**
5	Internal W 1/2"	Shank Ø 6 mm	50 | *2*	1	**000.071**
5	Internal M 6	Shank Ø 6 mm	50 | *2*	1	**000.072**
6	Internal W 1/2"		155 | *6*	1	**599.002**
6	Internal M 6		130 | *5 1/8*	1	**599.001**

Fitting Brushes

EAN

Interior Fitting Brushes IBM

D mm | *inch*	GL	A	Filling Material	Pack.	Art.-No.
8 | *5/16*	185	12	**ROF** 0.10 | *0.004"*	10	**562.508**
10 | *25/64*	185	12	**ROF** 0.10 | *0.004"*	10	**562.510**
12 | *15/32*	185	15	**ROF** 0.10 | *0.004"*	10	**562.512**
15 | *19/32*	185	20	**ROF** 0.15 | *0.006"*	10	**562.515**
18 | *45/64*	185	20	**ROF** 0.15 | *0.006"*	10	**562.518**
22 | *7/8*	185	25	**ROF** 0.20 | *0.008"*	10	**562.522**
28 | *1 7/64*	185	25	**ROF** 0.20 | *0.008"*	10	**562.528**
35 | *1 3/8*	185	25	**ROF** 0.20 | *0.008"*	10	**562.535**

Fitting Brushes
With designed two-components handle
For the inner cleaning in tubes in gas, water and climatic conditions. We use only stainless steel wire as the filling material for these brushes. This prevents long-term damage by material deposit in tubes.

Recommendation for users: When using interior fitting brushes, please only use brushes with stainless steel wire. This will avoid pitting by the use of rusting wire parts.

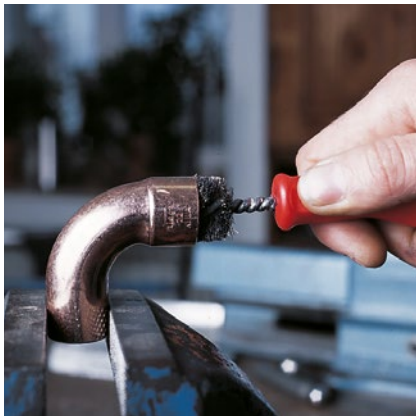

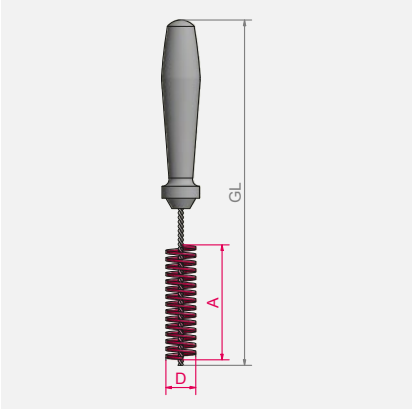

Item Nos. in bold are available ex stock.
Consider our minimum order value for *italic printed* article numbers (see page 178).

STA = steel wire
ROF = stainless steel wire
PP = polyprophylene

Brushes and Scratcher

1 Battery Terminal Brushes

Filling Material	D mm | *inch*	GL mm | *inch*	A mm | *inch*	Pack.	Art.-No.
STA	17+24 | *43/64+15/16*	120/180 | *4 3/4 / 7*	50 | *2*	12	**563.301***

2 Soluble Oil Brushes

Filling Material	Ø Bundle mm | *inch*	GL mm | *inch*	H mm | *inch*	Pack.	Art.-No.
mixed hair	7 | *9/32*	150 | *6*	40 | *1 5/8*	100	**570.907**
mixed hair	10 | *25/64*	240 | *9 1/2*	55 | *2 1/4*	100	**570.910**

3 Soldering Fluid Brushes

Filling Material	D mm | *inch*	GL mm | *inch*	H mm | *inch*	Pack.	Art.-No.
bristles	10 | *25/64*	123 | *4 7/8*	20 | *51/64*	100	**045.910**
bristles	15 | *19/32*	140 | *5 1/2*	25 | *1*	100	**045.915**
STA	20 | *51/64*	205 | *8 5/64*	30 | *1 1/4*	100	**045.301**

4 Rust Scratcher

Filling Material	D mm | *inch*	GL mm | *inch*	H mm | *inch*	Pack.	Art.-No.
STA straight 0.23	5/8 | *13/64 / 5/16*	100 | *4*	6 | *15/64*	180	**184.101**
STA Straight 0.23 | *0.009"* + **PP** 0.15 | *0.006"*	5/8 | *13/64 / 5/16*	100 | *4*	6 +15 | *15/64 + 19/32*	180	*184.104*

* conical filling

5 End Brush mutual filled

	D mm | *inch*	GL mm | *inch*	H mm | *inch*	Pack.	Art.-No.
ROF straight 0.30 + **spring steel strip** 6.4 x 0.8	15 | *19/32*	180 | *7*	22/25 | *7/8/1*	100	*184.412*

Battery Terminal Brushes
For cleaning of battery terminals. The twisted brush is conical filled for cleaning connection terminals of the battery cable. To clean the battery terminals use the ringshaped filed cards stuck in the handle.

Soluble Oil Brushes
With twisted wire handle for workshop use.

Soldering Fluid Brushes
The handle is made of tinned metal.

End brush with double-sided filling
End brushes with double-sided filling can be used for the manual removement of zinc ash without harming the zinc surface. Zinc ash is the result of oxidation on the surface of zinc baths. This happens usually on the edges of steelgirders with head and base plates. The spring steel strip on the one end of the end brush is used to remove more solid parts of dirt, whereas the with stainless steel wire filled other side of the brush can be used to remove the remaining dirt.

LESSMANN®

THE GERMAN BRUSH COMPANY

D.I.Y. BRUSHES AND SALES PROMOTION

06

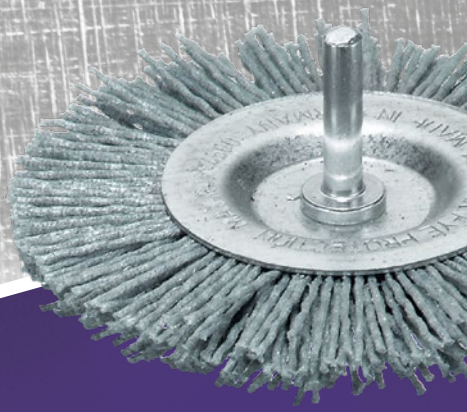

Do It Yourself Brushes

D.I.Y Brushes with Shank
Do It Yourself brushes are an excellent alternative to the professional tools previously shown in this catalogue. Available are cup brushes from diameter 50 – 75 mm, wheel brushes diameter 50 – 100 mm, end brushes and cylinder brushes.

Stainless Steel Brushes
Information on working on stainless steel you find at www.lessmann.com

Attractive assortment
Coarse and fine steel wire, brass wire and abrasive filaments are available as filling materials.

The brushes are packed in small display cartons, 10 pieces per carton.

We offer different packaging to present these and other common brushes with shanks in specialist shops.

Item Nos. in bold are available ex stock.
Consider our minimum order value for *italic printed* article numbers (see page 178).

STA = steel wire, crimped
ROF = stainless steel wire
MES = brass wire, crimped
SIC = silicon carbide bristles

1 Wheel Brushes with Shank Ø 6 mm

D mm | *inch*	A mm | *inch*	RPM max.	Pack.	**STA 0.25** | *0.010"*	**STA 0.35** | *0.014"*	**ROF 0.20** | *0.008"* Art.-No.	**ROF 0.30** | *0.012"* Art.-No.
50 | *2*	7 | *1/4*	4,500	10	**410.122***	**410.123****		
75 | *3*	8 | *3/8*	4,500	10	**410.132**	**410.133**	**410.134**	**410.135**
75 | *3*	12 | *1/2*	4,500	10		**410.173**		
100 | *4*	10 | *3/8*	4,500	10	**410.152**	**410.153**	**410.154**	**410.155**
100 | *4*	15 | *5/8*	4,500	10		**410.183**		**410.185**

D mm | *inch*	A mm | *inch*	RPM max.	Pack.	**MES 0.20** | *0.008"* Art.-No.	**MES 0.25** | *0.010"* Art.-No.	2 **SIC 80/1.2** Art.-No.	**SIC 180/0.9** Art.-No.
75 | *3*	8 | *3/8*	4,500	10		**410.136**	**410.138**	
100 | *4*	10 | *3/8*	4,500	10	**410.156**		**410.158**	*410.159*

* filament for this article with diameter 0.20 mm / 0.008"
** filament for this article with diameter 0.30 mm / 0.012"

1

2

3

4

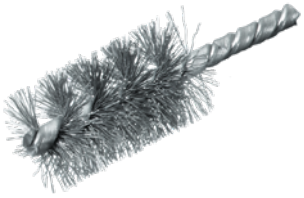

5

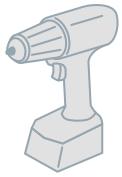

3 Cup Brushes with Shank Ø 6 mm

D mm | *inch*	RPM max.	Pack.	**STA 0.20** | *0.008"* Art.-No.	**STA 0.30** | *0.012"* Art.-No.	**ROF 0.20** | *0.008"* Art.-No.	**ROF 0.30** | *0.012"* Art.-No.
50 | *2*	4,500	10	**430.122**	**430.123**	**430.124**	**430.125**
75 | *3*	4,500	10	**430.132**	**430.133**	**430.134**	**430.135**

				4	
D mm | *inch*	RPM max.	Pack.	**MES 0.30** | *0.012"* Art.-No.	**SIC 80/1.2** Art.-No.	**SIC 320/0.6** Art.-No.
50 | *2*	4,500	10	**430.126**	**430.128**	**430.129**
75 | *3*	4,500	10	**430.136**	**430.138**	**430.139**

5 Cylinder Brushes with Shank Ø 6 mm

D mm | *inch*	RPM max.	Pack.	**STA 0.30** | *0.012"* Art.-No.
28 | *1*	1,500	10	**541.301**

Presentation „Cut Case“ Carton

EAN

Brushes in Cut Cases

Description	Filling material			Pack.	Carton size	Art.-No.
File Cleaner	**STA** straight 0.30	250 x 40		10	1	**037.201.CC**
Hand Brush	**STA** straight 0.35	2 Rows		10	1	**100.021.CC**
Hand Brush	**STA** straight 0.35	3 Rows		10	1	**100.031.CC**
Hand Brush	**STA** straight 0.35	4 Rows		10	1	**100.041.CC**
Hand Brush	**STA** straight 0.35	5 Rows		8	1	**100.051.CC**
Hand Brush	**STA** straight 0.35	6 Rows		8	1	**100.061.CC**
Hand Brush	**ROF** crimped 0.35	3 Rows		10	1	**104.631.CC**
Hand Brush	**ROF** crimped 0.35	4 Rows		10	1	**104.641.CC**
Hand Brush	**MES** crimped 0.35	3 Rows		10	1	**107.631.CC**
Hand Brush	**MES** crimped 0.35	4 Rows		10	1	**107.641.CC**
Hand Brush	**STA** straight 0.35	4 Rows	with Scraper	8	1	**120.401.CC**
Rivet Brush	**STA** straight 0.35	3 Rows	V-shaped	8	1	**120.801.CC**
Rivet Brush	**ROF** straight 0.35	3 Rows	V-shaped	8	1	**120.811.CC**
Duster	**PP** straight 0.40	4 Rows		6	2	**124.801.CC**
Spark Plug Brush	**MES** crimped 0.15	3 Rows		25	1	**125.211.CC**
Fine Scratch Brush	**MES** crimped 0.15	4 Rows		15	1	**126.411.CC**
Fine Scratch Brush	**PA** straight 0.30	4 Rows		15	1	**126.451.CC**
Staining Brush	**MES** crimped 0.15	7 Rows		6	1	**144.001.CC**
Staining Brush	**Leather/Fibre**	3/7 Rows		4	1	**144.701.CC**
Professional Hand Brush	**STA** straight 0.35	2 Rows	2 Components Handle	10	1	**182.401.CC**
Professional Hand Brush	**ROF** straight 0.35	2 Rows	2 Components Handle	10	1	**182.421.CC**
Professional Hand Brush	**MES** crimped 0.25	2 Rows	2 Components Handle	10	1	**182.451.CC**

Measurement in mm: Carton Size 1: 300 x 100 x 130 | Carton Size 2: 300 x 200 x 130

Cut Cases for presenting the products
Cut Cases are a simple alternative for presenting brushes in large quantities. The Products can be inserted in the self-service wall modularly.

EAN

Brushes in Cut Cases

Description	Filling material			Pack.	Carton size	Art.-No.
Wheel Brush with Plastic Body	**SIC** 80 / 1.2	7 Rows	Thread M 14	2	1	**402.880.CC**
Disc Brush with Plastic Body	**SIC** 80 / 1.2	4 Rows	Thread M 14	2	1	**405.845.CC**
Wheel Brush with Shank	**STA** gewellt 0,25	DRM 75	Shank 6 mm	25	1	**410.132.CC**
Wheel Brush with Shank	**STA** gewellt 0,35	DRM 100	Shank 6 mm	15	1	**410.153.CC**
Cup Brush	**STA** crimped 0.35	DIA 65	Thread M 14	15	1	*421.167.CC*
Cup Brush	**ROF** crimped 0.35	DIA 65	Thread M 14	15	1	*421.367.CC*
Cup Brush with Shank	**STA** gewellt 0,30	DRM 50	Shank 6 mm	15	1	**430.123.CC**
Cup Brush with Shank	**STA** gewellt 0,30	DRM 75	Shank 6 mm	15	1	**430.133.CC**
Knot Conical Brush	**STH** straight 0.50	DIA 100	Thread M 14	5	1	*471.257.CC*
Knot Wheel Brush	**STH** straight 0.50	DIA 115	Bore 22.2	6	1	*472.211.CC*
Knot Cup Brush	**STH** straight 0.50	DIA 65	Thread M 14	12	1	*482.217.CC*
Knot Cup Brush	**STH** straight 0.50	DIA 90	Thread M 14	8	1	*485.237.CC*
Cylinder Brush	**STA** gewellt 0,30	DRM 100	Shank 6 mm	20	1	**541.301.CC**

Measurement in mm: Carton Size 1: 300 x 100 x 130 | Carton Size 2: 300 x 200 x 130

Item Nos. in bold are available ex stock.
Consider our minimum order value for *italic printed* article numbers (see page 178).

STA	= steel wire, crimped
STH	= steel wire, high tensile, straight
ROF	= stainless steel wire
ROH	= stainless steel wire, high tensile, straight
MES	= brass wire
PA	= polyamide
PP	= polypropylene
SIC	= silicon carbide bristles

Packing and Sales Promotion

Technical data on front, details and EAN on back: Blister Packing

Brushes with blister packing
All standard brushes for drilling machines and angle grinders are available with blister packing. The blister packing is available with attractive labels with information about technical data and EAN-bar code. The clam shells emphasize the brushes' value, protect them and provide good visible presentation.

On request we can arrange your individual private label solution.

EAN

Brushes for Angle Grinders in Blister Packaging

	D	Thread	**STH 0.35** | *0.014"*	**STH 0.50** | *0.020"*	**ROF 0.35** | *0.012"*	**ROH 0.50** | *0.020"*	**STA 0.35** | *0.014"*
	mm | *inch*	mm | *inch*	Art.-No.	Art.-No.	Art.-No.	Art.-No.	Art.-No.
Knot Cup Brushes	65 | *2 1/2*	M 14	*482.117.09*	*482.217.09*		*482.817.09*	
	65 | *2 1/2*	M 10		*482.214.09*			
Knot Wheel Brushes	115 | *4 1/2*	Bo. 22.2 | *7/8*		*472.211.09*		*472.811.09*	
	115 | *4 1/2*	M 14		*472.217.09*			
Knot Bevel Brushes	100 | *4*	M 14		*471.257.09*			
	115 | *4 1/2*	M 14		*472.257.09*		*472.857.09*	
Cup Brushes crimped	60 | *2 3/8*	M 14			*421.367.09*		*421.167.09*
	60 | *2 3/8*	M 10					*421.164.09*
	75 | *3*	M 14					*423.167.09*
Conical Brushes crimped	100 | *4*	M 14					*422.177.09*

EAN

Brushes for Grinders and Drilling Machines with Shank Ø 6 mm in Blister Packaging

	D	**STH 0.35** | *0.014"*	**STH 0.50** | *0.020"*	**RO4 0.35** | *0.014"*
	mm | *inch*	Art.-No.	Art.-No.	Art.-No.
Knot End Brushes	19 | *3/4*	*453.278.09*		
	22 | *7/8*			*454.378.09*
Knot Wheel Brushes	75 | *3*		*417.198.09*	

EAN

D.I.Y. Brushes for Grinders and Drilling Machines with Shank Ø 6 mm in Blister Packaging

	D	**STA 0.25** | *0.010"*	**STA 0.30** | *0.012"* **0.35** | *0.014"*	**ROF 0.30** | *0.012"*	**MES 0.25** | *0.010"*	**SIC 80/1.2**
	mm | *inch*	Art.-No.	Art.-No.	Art.-No.	Art.-No.	Art.-No.
Wheel Brushes	50 | *2*		*410.123.09*			
	75 | *3*		*410.133.09*	*410.135.09*	*410.136.09*	*410.138.09*
	100 | *4*	*410.152.09*	*410.153.09*			*410.158.09*
Cup Brushes	50 | *2*	*430.122.09*	*430.123.09*		*430.126.09*	*430.128.09*
	75 | *3*		*430.133.09*			*430.138.09*
Cylinder Brushes	28 | *1*		*541.301.09*			

Sales Promotion Hangers / Card

1 2

3

Low-cost product presentation – Brushes on card

Presentation for tube brushes
With this practical hanger assembly from now on also tube brushes with thread can be presented on self-service walls in the retail market.
The hangers are available in M 6, M 10 and W 1/2". All hangers are with a eurohole.
A label can be fixed at the front of the hanger.

Item Nos. in bold are available ex stock.
Consider our minimum order value for *italic printed* article numbers (see page 178).

STA	= steel wire, crimped
STH	= steel wire, high tensile, straight
MES	= brass wire, crimped
SIC	= silicon carbide bristles

1 Hanger assembly for tube brushes, PP black, with euro hole

Interior Thread	Total length mm | *inch*	Width mm | *inch*	Height mm | *inch*	Pack.	Art.-No.
M 6	135 | *5*	42 | *1 5/8*	2 | *5/64*	10	**000.501**
M 10	135 | *5*	42 | *1 5/8*	2 | *5/64*	10	**000.503**
W 1/2"	135 | *5*	42 | *1 5/8*	2 | *5/64*	10	**000.507**

EAN

2 Brushes with thread, incl. hanger assembly

	Diameter Brush mm | *inch*	Total length Brush mm | *inch*	Total length Brush mm | *inch*	Thread Brush	Pack.	STA Art.-No.
Tube Brushes	20 | *3/4*	150 | *6*	100 | *4*	W 1/2"	10	*502.120.03*
	30 | *1 1/4*	160 | *6 1/4*	100 | *4*	W 1/2"	10	**506.130.03**
	35 | *1 1/2*	160 | *6 1/4*	100 | *4*	W 1/2"	10	*506.135.03*
	40 | *1 3/8*	160 | *6 1/4*	100 | *4*	W 1/2"	10	**506.140.03**
	50 | *2*	160 | *6 1/4*	100 | *4*	W 1/2"	10	**506.150.03**
	63 | *2 1/2*	160 | *6 1/4*	100 | *4*	W 1/2"	10	*506.163.03*
	75 | *3*	160 | *6 1/4*	100 | *4*	W 1/2"	10	**506.175.03**
	101 | *4*	160 | *6 1/4*	100 | *4*	W 1/2"	10	**506.101.03**
Boiler Brushes	40 x 80 | *1 3/8 / 3*	160 | *6 1/4*	100 | *4*	W 1/2"	10	**532.202.03**
	50 x 100 | *2 / 4*	160 | *6 1/4*	100 | *4*	W 1/2"	10	**532.203.03**

EAN

3 Brushes with Shank Ø 6 mm on Card

Description and technical data please see pages 73, 132, 133

	D mm | *inch*	Pack.	**STA 0.30** | *0.012"* **0.35** | *0.014"*	**MES 0.25** | *0.010"* **0.30** | *0.012"*	**SIC 80** Art.-No.	**STH knotted** **0.50** | *0.020"*
Wheel Brushes	50 | *2*	10	**410.123.07**			
	75 | *3*	10	**410.133.07**	**410.136.07**	*410.138.07*	**417.198.07**
	100 | *4*	10	**410.153.07**		**410.158.07**	
Cup Brushes	50 | *2*	10	**430.123.07**	**430.126.07**	**430.128.07**	
	75 | *3*	10	**430.133.07**		**430.138.07**	
Cylinder Brushes	28 | *1*	10	**541.301.07**			

Sales Promotion

Professionalism, service, quality...
The LESSMANN Display units will make a good impression on your customers. They are not only good for your image but will also have a positive effect on promoting and increasing your brush sales. The comprehensive and at the same time clear presentation makes the customers choice much easier.

Take advantage of our experience and use this possibility that will lead to successful increased sales. Beside your special demands the most important thing to know is the branch where your most important customers come from and what their demands are. We have tried and tested variations of assortments for different kind of constellation. Please do not hesitate to contact us and we will arrange your individual programme. Because the production of high quality brushes is as important as having success with our products!

1 | Self-service Wall 100 x 220 cm
The most effective sales promotion for your LESSMANN brush assortment. Available with LESSMANN logo or Brush-Know-how label.

2 | Individual mix for Success
Products that fit in with the wishes of your (most important) customers and their main demand, arranged together with you and your customers. Your assortment can mainly consist of technical brushes or hand brushes.

3 | Carton Packing
All brushes for angle grinders in sales promoting single packing – stable and safe.

4 | Hand Brushes with EAN Code
All standard hand brushes (article no. 10x.xxx) with EAN code. Without extra charges for you!

5 | Display boxes for Shank Brushes
Available as a standard for all shank wheel brushes, cup brushes and end brushes with shank.

6 | Brush-Know-how Flyer
The most important brush applications of our brush assortment in length DIN with technical information and hints!

7 | Hanger Assembly for tube brushes
With this hanger with euro hole, brushes with thread can be presented.

8 | Cut Cases
Cut Cases for an easy solution of presenting products in large quantities.

We will help you with the right choice of shelf
On request we can arrange the right shelf solution for presenting your brushes!

Small self-service wall
A suitable alternative solution: A practical self-service wall with the measurements 67 x 180 cm.

Private Label
A good idea with different solution possibilities. Ask for your own brand!

Sales promoting blister packing
For all drilling machines and angle grinders.

Take a look at quality
All technical data and safety information as well as observation windows for recognising the brushes (e.g. green marking for stainless steel brushes).

Stainless Steel Marking
LESSMANN brushes with stainless steel wire can easily be recognised by green cups or side plates.

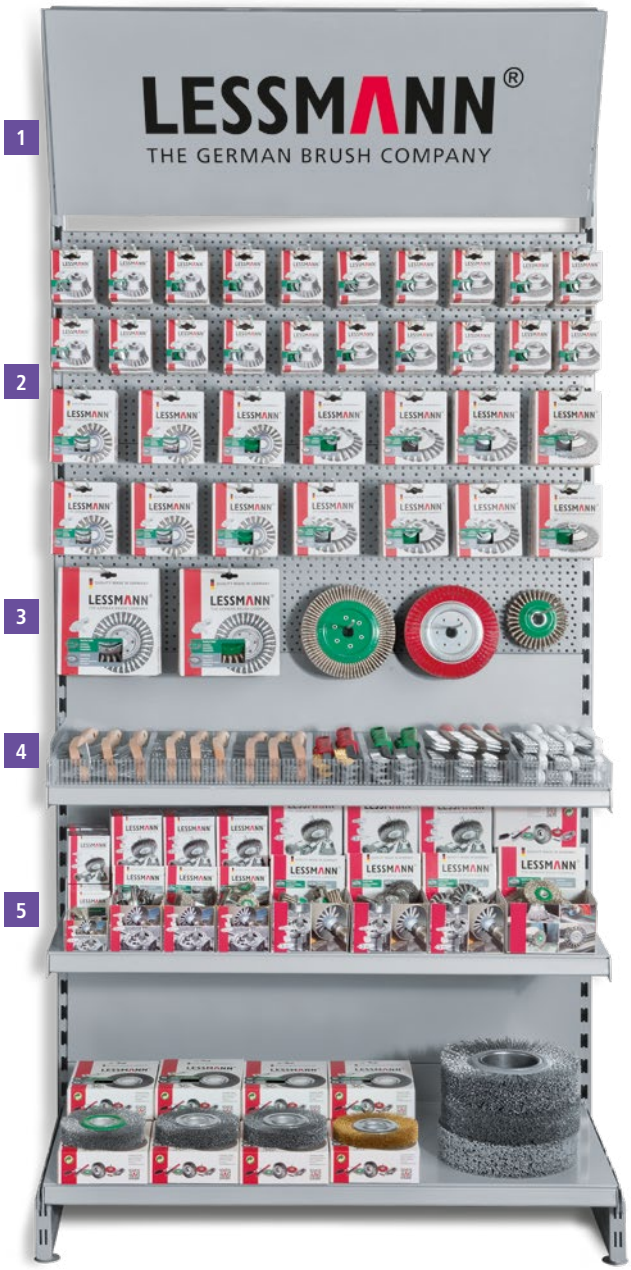

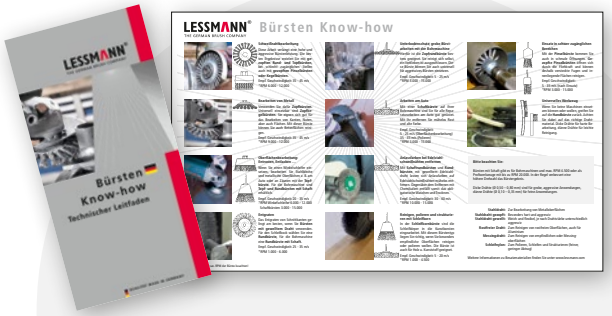

Brush-Know-how flyer
The most important brush application of our brush assortment in length DIN with technical information and hints!

Order now:
German version: Art.-No. **99BKHDEU**
English version: Art.-No. **99BKHENG**

Cut Cases
Cut Cases for an easy solution of presenting products in large quantities.

LESSMANN®

THE GERMAN BRUSH COMPANY

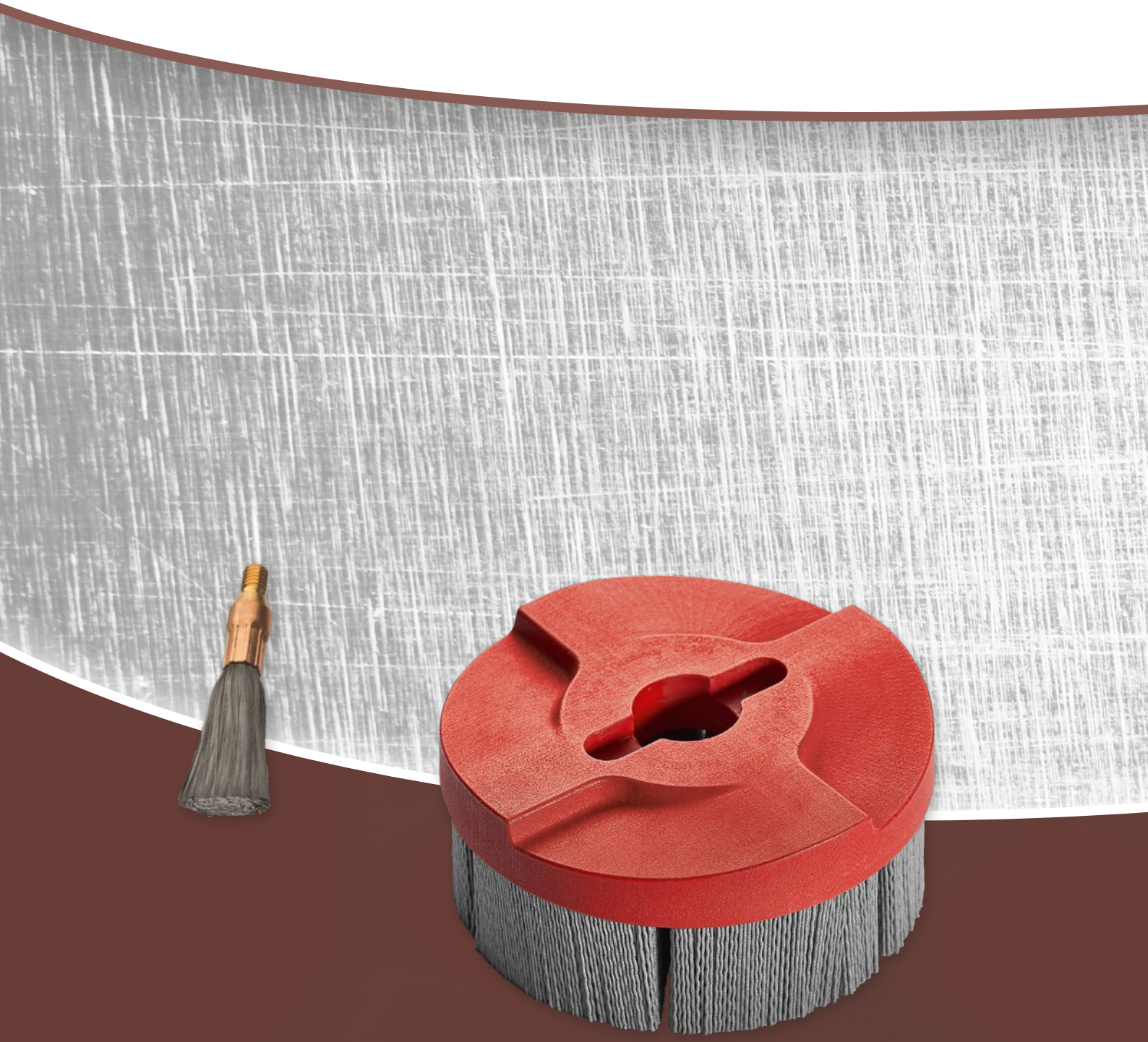

INDUSTRIAL BRUSHES 08

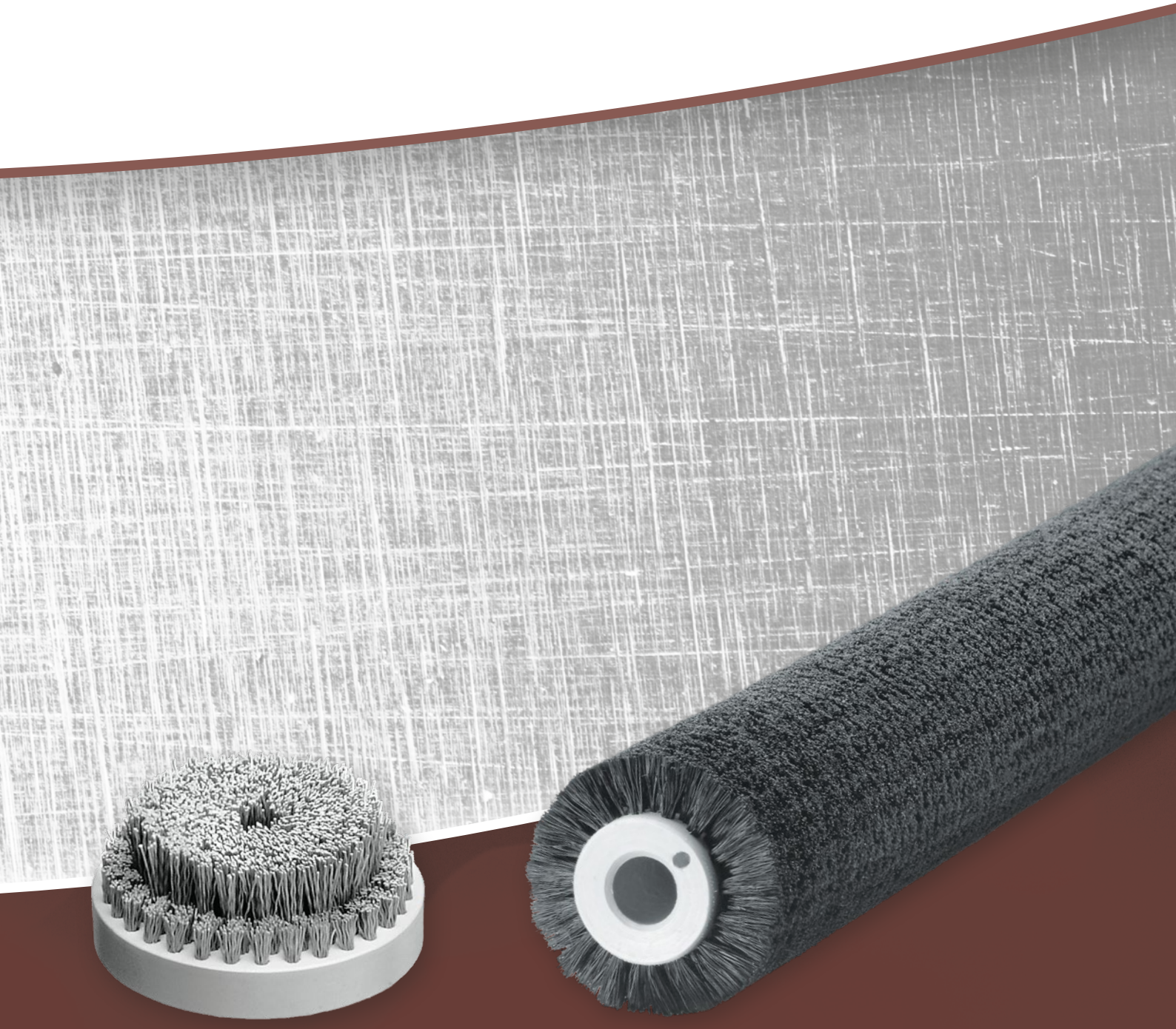

Brushes with carbon fibre

Brushes with carbon fibre for electrochemical cleaning

To use in machines for cleaning weld seams

Due to oxidation on stainless steel surfaces temper colour is a result from heating. Hence often a post-treatment of the surface is necessary to reestablish the original character.
End brushes with carbon fibres are used in special machines for cleaning weld seams. The typical electrochemical jobs are the following:

Cleaning
To remove tepering colour and scales on stainless steel surfaces, e.g. on weld seams.

Polishing
For polishing stainless steel surfaces. Residues can be removed with end brushes.

Marking
With special patterns surfaces can be marked permanently by the electrochemical process.

Electroplating / Surfacing
Due to the use of the end brushes, different coatings can be put on the surfaces or they can be refined.

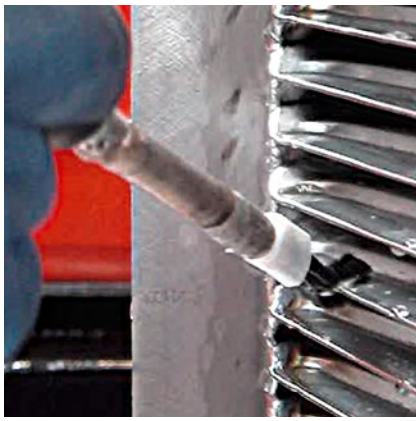

Cleaning of areas which are hard to reach

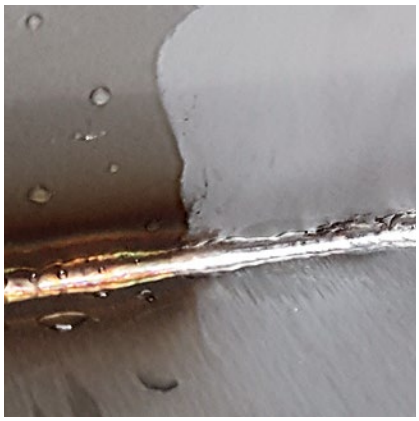

Before the treatment | After the treatment
Cleaning of weld seams

End brushes for standard machines
For many customary available machines for weld seam treatment LESSMANN offers the suitable end brushes.
Depending on the customers' demands the end brushes are available with different adapters, e.g. interior / exterior threads.

Time-saving and effective
Unlike other processes, working with special machines for weld seam cleaning are environmentally friendly and by using it correctly no toxic vapours are generated.
Due to the high flexibility of the filament also areas which are hard to reach can be treated easily.
By using LESSMANN brushes within a short time a clean result is achieved. Weld seams are treated without any residues and surfaces are treated without being damaged.

Brushes with carbon fibre

	Sleeve	D mm | *inch*	GL mm | *inch*	H mm | *inch*	Shape of thread	GA/GI	Presentation	Pack.	Art.-No.
1	Copper	10 | *25/64*	65 | *2 3/8*	30 | *1 3/16*	outside	M6		10	**047.700**
2	Copper	12 | *15/32*	90 | *3 1/2*	40 | *1 5/8*	inside	M10 x 0.75	Plastic coating	10	**047.705**
	Copper	12 | *15/32*	90 | *3 1/2*	40 | *1 5/8*	inside	M10 x 1.0	Plastic coating + side thread M4	10	**047.707**
	Copper	10 | *25/64*	80 | *3 1/4*	30 | *1 3/16*	inside	M8 x 1.0	Plastic coating	10	**047.708**
3	Stainless Steel	8 | *5/16*	50 | *2*	30 | *1 3/16*	outside	M6 x 1.0	Teflon sleeve (DRM 12 mm)	10	**047.750**
	Stainless Steel	8 | *5/16*	50 | *2*	30 | *1 3/16*	outside	M6 x 1.0		10	**047.755**
4	Stainless Steel	8 | *5/16*	72 | *2 53/64*	42 | *1 21/32*	outside	M6 x 0.75	Plastic coating	10	**047.754**
5	Stainless Steel	12 | *15/32*	75 | *3*	40 | *1 5/8*	inside	M10		10	**047.757**
6	Stainless Steel	10 | *25/64*	130 | *5 1/8*	60 | *2 3/8*	outside	M6 x 0.75	Plastic coating + external thread M12	10	*047.763**
	Stainless Steel	10.5 | *13/32*	130 | *5 1/8*	60 | *2 3/8*	outside	M6 x 0.75	Plastic coating + external thread M14	10	*047.764**
7	Brass	12 | *15/32*	75 | *3*	40 | *1 5/8*	inside	M10		10	**047.801**

* Teflon protective sleeve on request

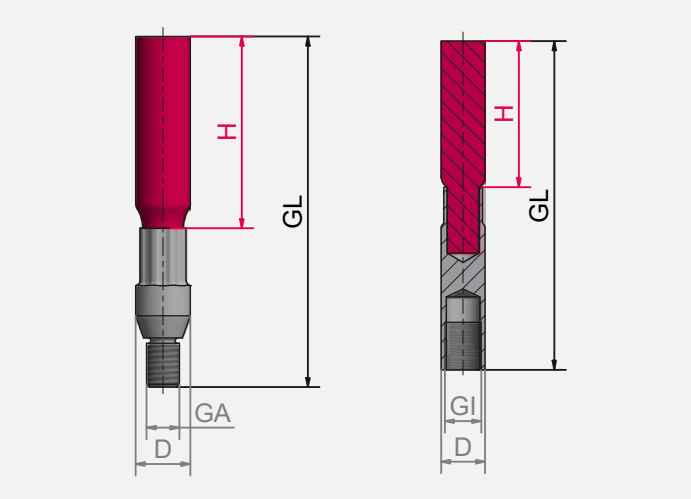

Item Nos. in bold are available ex stock.
Consider our minimum order value for *italic printed* article numbers (see page 178).

High Performance Filament Brushes

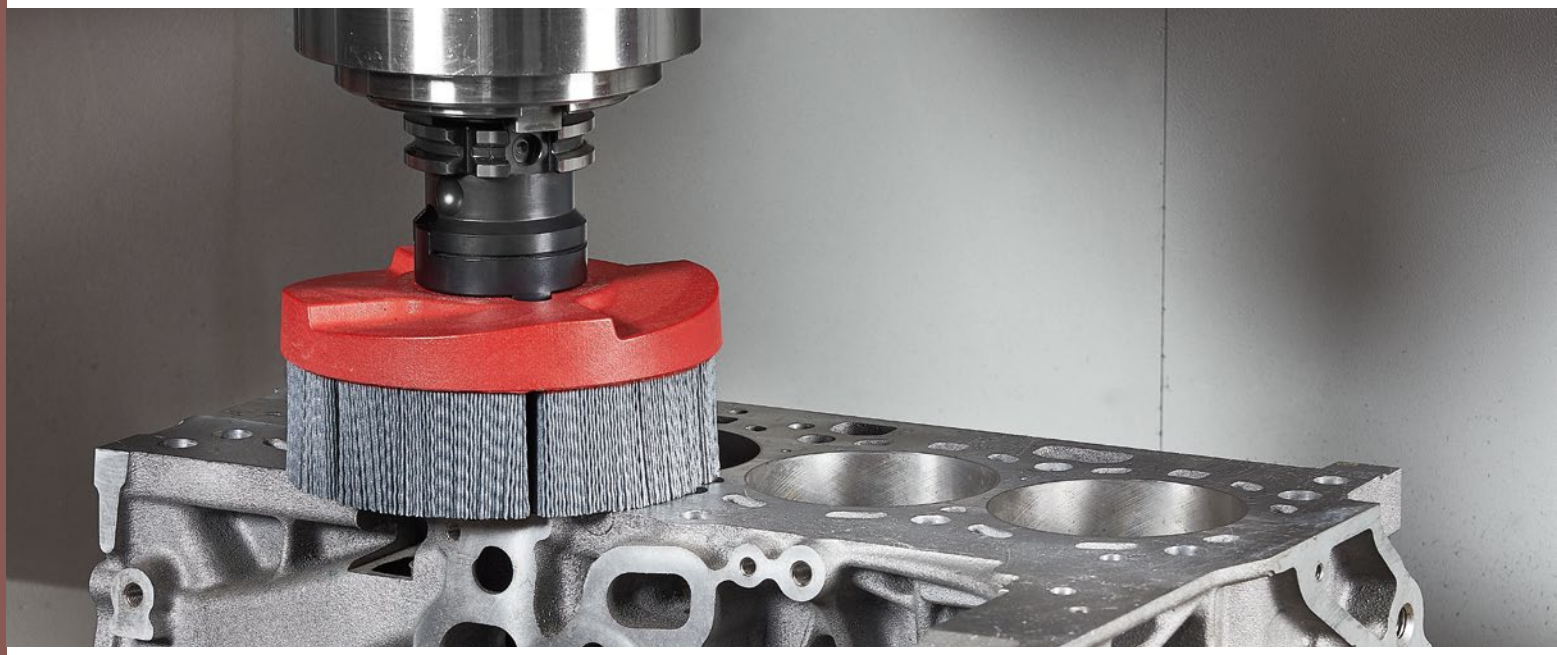

HFB Disc Brushes
LESSMANN high performance surface finishing tools achieve excellent deburrings and edge radiusing on exterior and interior areas of work pieces. Next to the applications in machining centers, especially in linear deburring and finishing lines with planetary brush systems HFB brushes obtain high efficiency.

They are used for e.g. for the deburring of
- blanked parts
- sintered parts
- hydraulic and pneumatic work pieces
- aluminium work pieces
- and many more

Also work pieces which are exposed to high pressures demand precise egde radiuses. LESSMANN HFB brushes are ideal tools which achieve these requirements outstandingly.

Filling material
In a special production process LESSMANN HFB brushes are manufactured with a very high filling density. Available are high abrasive nylons with silicon carbide, ceramic or diamond grit. Standard in LESSMANN HFB Brushes high quality filling material is used (PA 6.12). It is very bending resistant and abrasion-resistant.
Due to the application orientated selection of the filling materials an excellent deburring and constant edge radiusing in a short working time is achieved.

Depending on the HFB application the brushes can be used under dry condition or with addition of coolants.

Arrangement filling material
Depending on the requirements, the brushes can be manufactured with individual filling fields. For example, full filament is possible, but also the division of the abrasive bristles into defined fields or deviation of the bristles. Depending on the direction of rotation, more effective processing is possible, for example due to the optimum removal of cooling water.

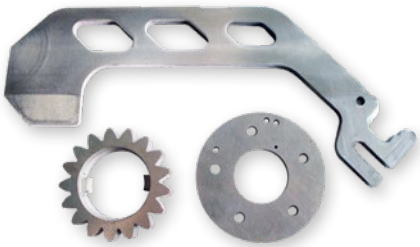

Typical work pieces which are treated with LESSMANN HFB brushes.

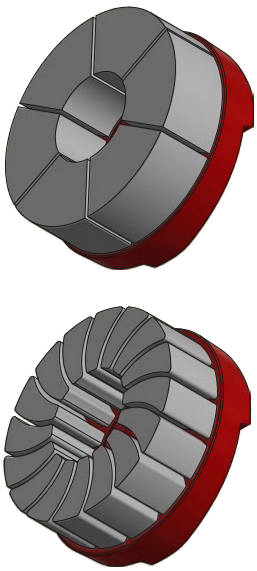

Examples arrangement filling material

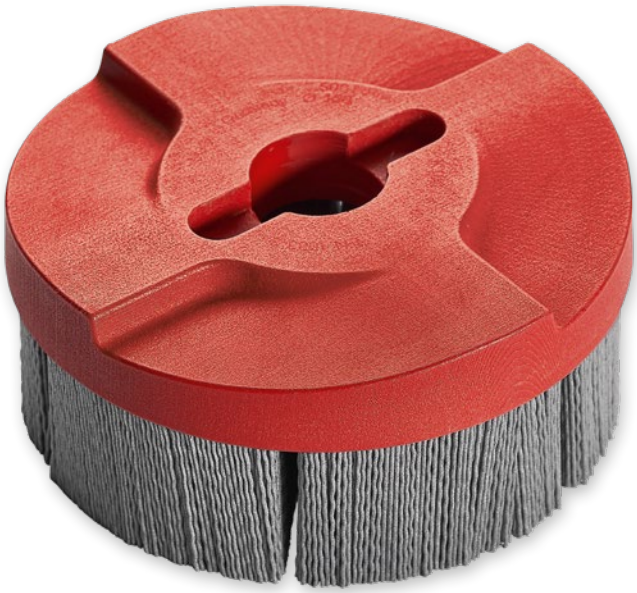

Revised clamping system
LESSMANN manufactures brush types for all common brands of machines and drilling patterns according to customer specifications. Our basic versions, suitable for the common machines with cutter head holder (DIN 6357) or combi-milling arbor holder (DIN 6358), as well as special models are available short-term. LESSMANN HFB brushes are also suitable for accessories for working under wet conditions, e.g. clamping screws with coolant holes.

On request we can deliver the brushes with bore according to your special requirements.

Revised design
LESSMANN HFB brushes are constantly being further developed to meet the latest technical requirements. The latest adaptation is the revised design of the brush plate, which has been given a curved shape. Thus the brush can be used more flexible and the brush body is even more stable. The resulting dynamic rotation gives the brush optimum conditions for precise work. In addition, less chips and oil are trapped in the brush during machining, which leads to less abrasive wear.

User tips
- The optimum speed is usually clearly below the maximum speed. Please note the information on the brush body. See page 10 for details.
- The feed rate of the brush depends on the desired brush result and must be determined individually.
- When using the brush, make sure that all edges and surfaces to be machined are reached. In order to ensure uniform processing, it is important that the brush is not removed from the workpiece prematurely, especially during start-up and run-out.

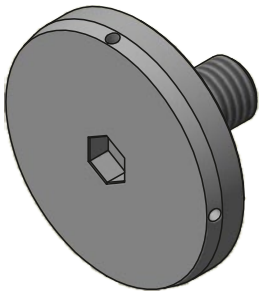

Clamping screw with coolant holes

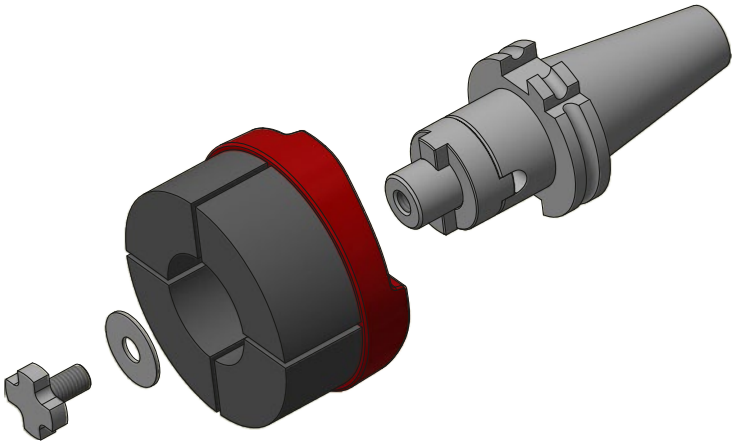

Common combi arbor holder for HFB brushes.

Contact us for further information and a nonbinding consultation!

High Performance Filament Brushes

1

2

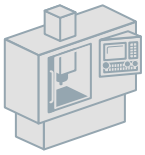

1 HFB Disc Brushes, full body, silicon carbide bristles

Body Ø DA mm | *inch*	Body Thickness KD mm | *inch*	Filling Length H mm | *inch*	Bore DB	Open Space DIF mm | *inch*	Open Space DA mm | *inch*	RPM max.	Pack.	SIC 80/1,2 Art.-Nr.	SIC 120/1,1 Art.-Nr.	SIC 180/1,0 Art.-Nr.
50 | *2*	18 | *5/8*	35 | *1 3/8*	16 DKN	25 | *1*	45 | *2*	4,500	1	**601.204.20**	**601.304.20**	**601.404.20**
75 | *3*	20 | *3/4*	35 | *1 3/8*	22 DKN	34 | *1 1/4*	70 | *2 3/4*	4,500	1	**602.214.20**	**602.314.20**	**602.414.20**
100 | *4*	20 | *3/4*	35 | *1 3/8*	22 DKN	45 | *2*	95 | *3 1/2*	3,600	1	**603.214.20**	**603.314.20**	**603.414.20**
125 | *5*	22 | *7/8*	40 | *1 5/8*	27 DKN	55 | *2 31/4*	120 | *4 3/4*	3,000	1	**604.225.20**	**604.325.20**	**604.425.20**
150 | *6*	25 | *1*	40 | *1 5/8*	32 DKN	60 | *2 3/8*	145 | *5 71/100*	2,500	1	**605.265.20**	**605.365.20**	**605.465.20**

2 HFB Disc Brushes, full body, ceramic grit

Body Ø DA mm | *inch*	Body Thickness KD mm | *inch*	Filling Length H mm | *inch*	Bore DB	Open Space DIF mm | *inch*	Open Space DA mm | *inch*	RPM max.	Pack.	KK 80/1,2 Art.-Nr.	KK 120/1,1 Art.-Nr.
50 | *2*	18 | *5/8*	35 | *1 3/8*	16 DKN	25 | *1*	45 | *2*	4,500	1	**601.204.30**	**601.304.30**
75 | *3*	20 | *3/4*	35 | *1 3/8*	22 DKN	34 | *1 1/4*	70 | *2 3/4*	4,500	1	**602.214.30**	**602.314.30**
100 | *4*	20 | *3/4*	35 | *1 3/8*	22 DKN	45 | *2*	95 | *3 1/2*	3,600	1	**603.214.30**	**603.314.30**
125 | *5*	22 | *7/8*	40 | *1 5/8*	27 DKN	55 | *2 31/4*	120 | *4 3/4*	3,000	1	**604.225.30**	**604.325.30**
150 | *6*	25 | *1*	40 | *1 5/8*	32 DKN	60 | *2 3/8*	145 | *5 71/100*	2,500	1	**605.265.30**	**605.365.30**

DKN = double keyway

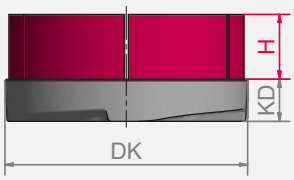

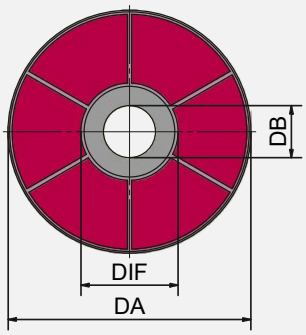

Item Nos. in bold are available ex stock.
Consider our minimum order value for *italic printed* article numbers (see page 178).

SIC = silicon carbide bristles
KK = ceramic grit

Enquiry for High Performance Filament Brushes

Drawing / description of application

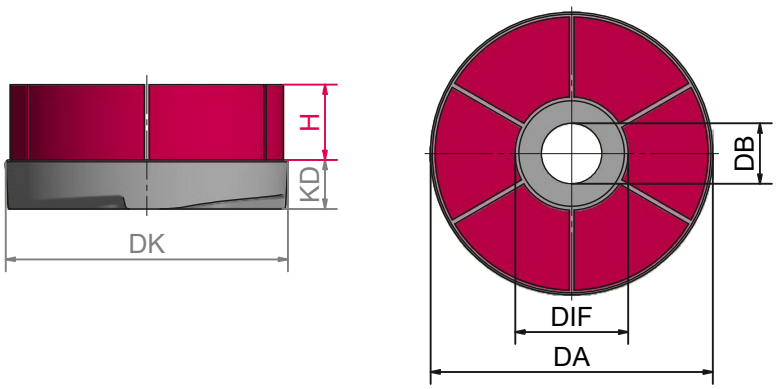

Sender: company, contact person

Inquiries and Infos:
Phone: +49 9082 707-0 info@lessmann.com
Fax: +49 9082 707-76 www.lessmann.com

Piece number _____

Brush Application ☐ dry ☐ wet
☐ deburring
☐ others _____

Material to be treated ____°C Temperature
☐ steel
☐ aluminium
☐ stainless steel
☐ others _____

Filling material
☐ silicon carbide bristles (SIC)
☐ aluminium oxide bristles (AO)
☐ ceramic grit (KK)
☐ diamond grit (DIA)

Diameter of filling material _____

filling placement

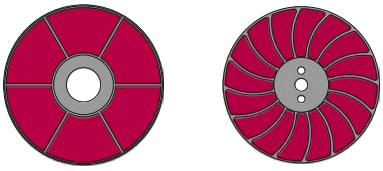

☐ full-body ☐ turbo

turbo right / left (standard right) _____

Please indicate the dimensions according to the technical drawing (mm):

DK body diameter _____ mm
DA Dia filament outside _____ mm
DIF Dia filament inside _____ mm
H Filling height _____ mm
Deviation of the bristles _____ °

☐ Standard bore
(adapted to body diameter, see table on left page
☐ Special bore _____

Staple Set Brushes

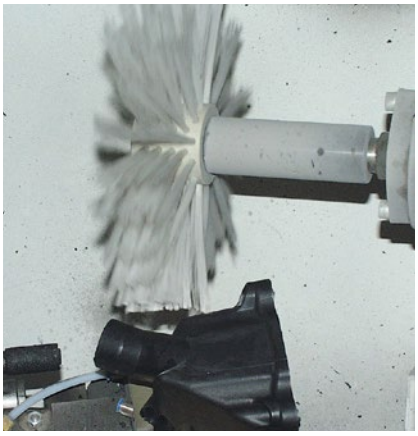

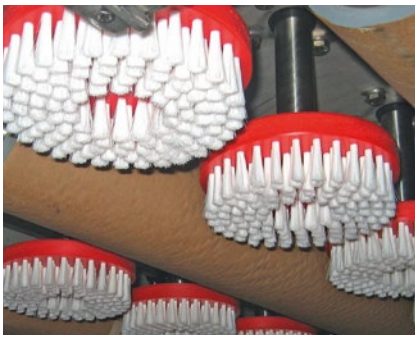

Staple Set Brushes
For applications with little mechanic load, brushes in a staple set edition are produced.
Typical applications for staple set Wheel Brushes and Wide Face Brushes, Disc Brushes or Lath Brushes are for example cleaning, deburring, surface finishing, structurizing, smoothing, transporting, sorting or moistening.
Depending on the requirements, the filling material can be fixed individually into the body. The distance of the bundles are variable and comply with the application.
As filling material next to different wires also fibres are available. Also mixed filament in various mixing proportions are possible.
Disc Brushes usually are delivered with thread or bore. Staple set wheel and roller brushes are produced with bore or arbour absorption, depending on the customers' specification.

Please inform yourself on the following pages and do not hesitate to contact us for personal advice!

Possible desities of brush filling material
for Wheel Brushes and Wide Face Brushes, Disc Brushes and Lath Brushes

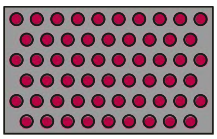
thin filling material

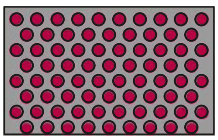
mean desity of filling material

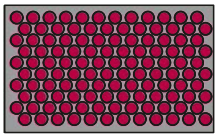
dense filling material

Possible placement of brush filling material
for Wheel Brushes and Wide Face Brushes, Disc Brushes and Lath Brushes

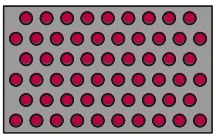
staggered filling material

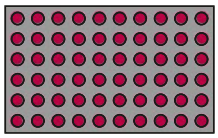
straight filling material

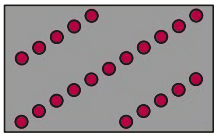
spiral filling material

Disc Brushes

Disc Brushes – Measurements

DA External diameter mm	KD Body height mm	H Trim height mm	Deviation of the Bristles	DB/GI Thread	Body Material	Trim Material	Trim Density
10 – 800	10 – 100	8 – 95 steel 8 – 135 Plastic	max. 45°	freely selectable	PP, PE, PA, Wood, Plywood	STA, STM, MES, ROF, PP, PE, PA, FIB, ROS, SIC, AO	thin, mean, dense

Disc Brushes – for cleaning and deburring
Disc Brushes are used for the treatment of plane surfaces on almost every material. The numerous variations of body and trimming materials and adapter systems make them for all purposes applicable.
For deburring working pieces, disc brushes can be inserted in individual equipments as well as in machining centres for removing secondary burrs.

Disc Brushes for the wood machining industry
Disc brushes used for the wood machining industry have a very long filling material (SIC). Used on angle grinders, the disc brushes are ideal for maintaining, cleaning, structuring or polishing wood.
The brushes are very effective when working on large surfaces.

Circular Discs – Standard Body
If your application allows the mentioned sizes, we recommend our standard bodies.

Item Nos. in bold are available ex stock.
Consider our minimum order value for *italic printed* article numbers (see page 178).

STA	= steel wire
STM	= brass coated steel
ROF	= stainless steel wire
MES	= brass wire
PP	= polypropylene
PA	= polyamide
PE	= polyethylene
FIB	= fibre
ROS	= horse hair
SIC	= silicon carbide bristles
AO	= aluminium oxide bristles

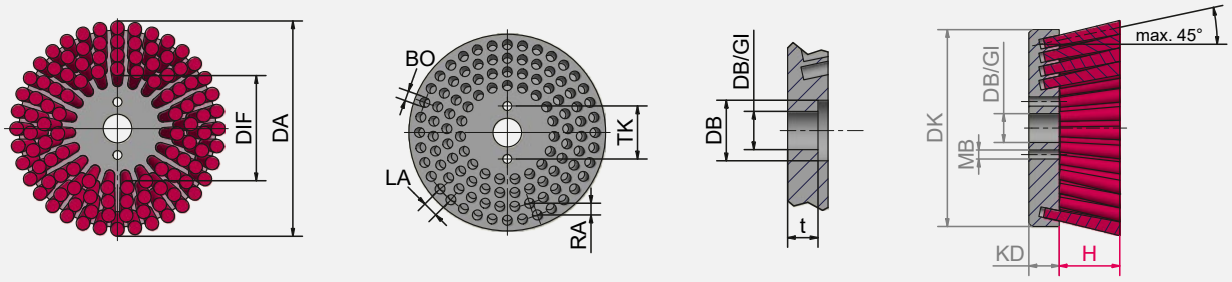

Disc Brushes

Disc Brushes

	Filling	DA mm | *inch*	KD mm | *inch*	H mm | *inch*	d1 mm | *inch*	RPM max.	Art.-No.
	STA 0.20 | *0.008"*	150 | *6*	25 | *1*	25 | *1*	M 14	2,000	**405.006**
	SIC 180/1.0	125 | *5*	25 | *1*	25 | *1*	22.2 | *7/8*	3,000	*405.854*
	SIC 180/1.0	150 | *6*	25 | *1*	20 | *3/4*	25 | *1*	2,000	*405.835*
	SIC 120/1.1	150 | *6*	25 | *1*	25 | *1*	25 | *1*	2,000	*405.864*
1	**Mixed filament STA** 0.30 / **PA** 0.35	130 | *5 1/8*	25 | *1*	40 | *1 3/8*	M 14	2,500	*405.908*
1	**Mixed filament STA** 0.30 / **PA** 0.35	200 | *8*	25 | *1*	40 | *1 3/8*	M 14	1,500	*405.905*

2 Disc Brushes for the wood machining

Filling	DA mm | *inch*	KD mm | *inch*	H mm | *inch*	d1	RPM max.	Pack.	Art.-No.
SIC 46/1.6	130 | *5 1/8*	20 | *3/4*	50 | *2*	M 14	2,500	1	**405.843**
SIC 60/1.5	130 | *5 1/8*	20 | *3/4*	50 | *2*	M 14	2,500	1	**405.844**
SIC 80/1.2	130 | *5 1/8*	20 | *3/4*	50 | *2*	M 14	2,500	1	**405.845**

Circular Discs – Standard Body Measurements (in Stock) Body Material PP (red)

DA mm | *inch*	KD mm | *inch*	Bore / Thread
130 | *5 1/8*	20 | *3/4*	Bore 22.5 / 19
150 | *6*	25 | *1*	Bore 12
150 | *6*	25 | *1*	Bore 35 / 25, mounting hole 2 x Ø 11 mm, TK 56
165 | *8 1/2*	25 | *1*	Bore 20 / 30, mounting hole 1 x Ø 7 mm, TK 48
180 | *7*	18 | *5/8*	Thread M12
180 | *7*	18 | *5/8*	Thread M12 left
200 | *8*	25 | *1*	Bore 12
200 | *8*	25 | *1*	Bore 35 / 25, mounting hole 2 x Ø 11 mm, TK 56
220 | *8 5/8*	20 | *3/4*	Bore 40

The standard bodies can be adapted on demand (dress to size, drill) for receiving other measurements.

3 Brush intake with shank

D mm | *inch*	KL mm | *inch*	mm | *inch*	Art.-No.
16 | *5/8*	81 | *3/16*	Bore 35/25 | *1 3/8/1*	*000.051*

Enquiry for Disc Brushes

Drawing / description of application

Circular Discs – Standard Body Measurements (in Stock) Body Material PP (red)

DA mm | *inch*	KD mm | *inch*	Bore / Thread
130 | *5 1/8*	20 | *3/4*	Bore 22.5 / 19
150 | *6*	25 | *1*	Bore 12
150 | *6*	25 | *1*	Bore 35 / 25, mounting hole 2 x Ø 11 mm, TK 56
165 | *8 1/2*	25 | *1*	Bore 20 / 30, mounting hole 1 x Ø 7 mm, TK 48
180 | *7*	18 | *5/8*	Thread M12
180 | *7*	18 | *5/8*	Thread M12 left
200 | *8*	25 | *1*	Bore 12
200 | *8*	25 | *1*	Bore 35 / 25, mounting hole 2 x Ø 11 mm, TK 56
220 | *8 5/8*	20 | *3/4*	Bore 40

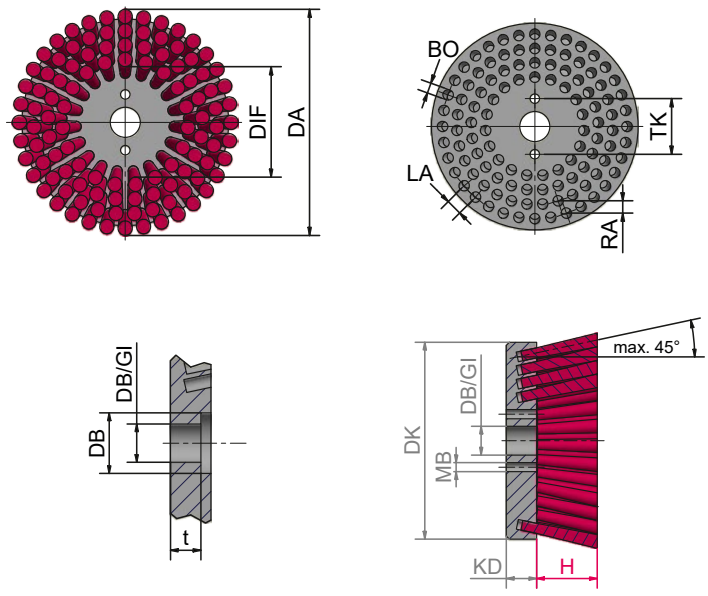

Sender: company, contact person

Inquiries and Infos:
Phone: +49 9082 707-0 info@lessmann.com
Fax: +49 9082 707-76 www.lessmann.com

Piece number: _____

Brush Application ☐ dry ☐ wet
- ☐ deburring
- ☐ cleaning
- ☐ surface treatment
- ☐ others _____

Material to be treated _____°C Temperature
- ☐ steel
- ☐ aluminium
- ☐ wood
- ☐ stainless steel
- ☐ plastic
- ☐ others _____

Filling material
- ☐ steel
- ☐ brass coated steel
- ☐ brass
- ☐ stainless steel
- ☐ polypropylene
- ☐ polyethylene
- ☐ polyamide
- ☐ silicon carbide bristles (SIC)
- ☐ aluminium oxide bristles (AO)
- ☐ fibre
- ☐ horse hair
- ☐ other _____

Diameter of filling material _____

Filling density

☐ light ☐ medium ☐ close

Filling placement

☐ **full seat** ☐ **block fill** ☐ **dynamic fill**

Please mention measurements according to drawing (mm)

DK	body diameter	_____	mm
DA	outer diameter	_____	mm
DIF	inner diameter	_____	mm
KD	body thickness	_____	mm
DB/GI	bore	_____	mm
DB	diameter counterbore	_____	mm
TK	pitch circle drive bore	_____	mm
MB	diameter drive bore	_____	mm
H	trim height	_____	mm
Stocking skew		_____	°

Body material
- ☐ polypropylene (standard)
- ☐ other _____

INDUSTRIAL BRUSHES

Lath Brushes

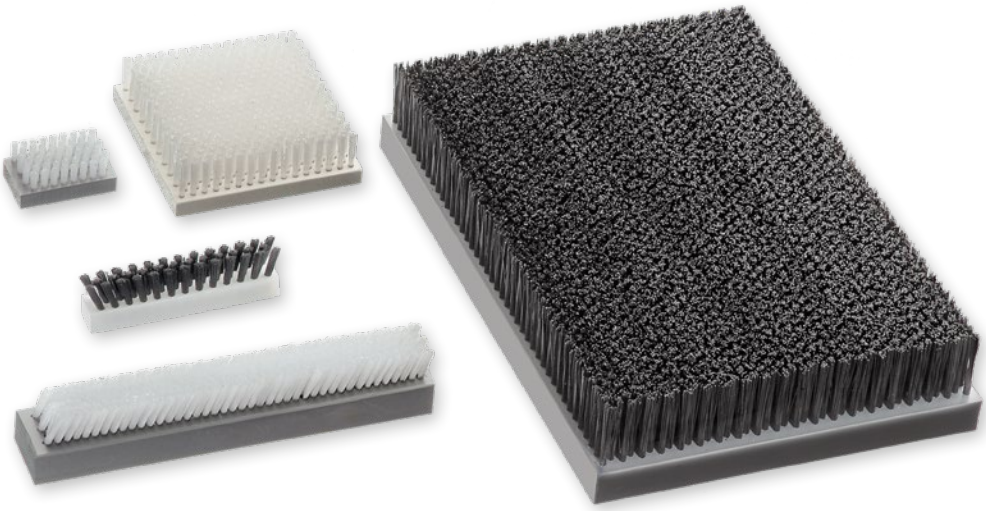

Lath Brushes – Measurements

KB	KL	KD	H	Deviation	Body	Filling	Filling
mm	mm	mm	mm	of the Bristles	Material	Material	Density
8 – 750	8 – 2400	10 – 100	8 – 95 Steel 8 – 135 Plastic	max. 35°	PP, PE, PA, Wood, Stack wood	STA, STM, MES, ROF, PP, PE, PA, FIB, ROS, SIC, AO	thin, mean, dense

Lath Brushes
Lath Brushes work in machines and are used for clearing, cleaning, insulating and discharging electric charges etc. Various body materials are possible: including wood and plastic.
The filling material can be manifold and goes from fine horsehair to firm steel wire. Through the deviation of the bristles until 35° the lath bushes are very flexible in their applications.

As required the stocked standard bodies could be reworked (turned, drilled out) to get further dimensions

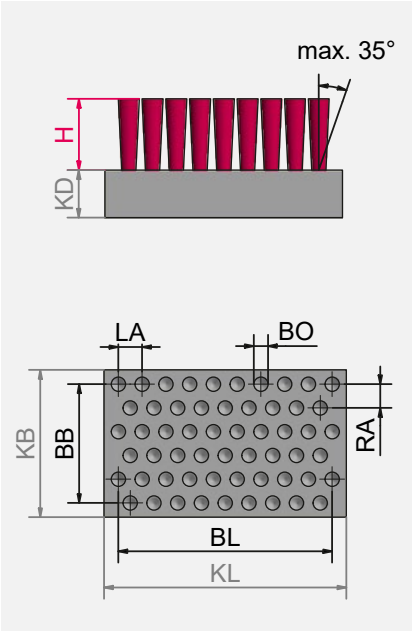

Item Nos. in bold are available ex stock.
Consider our minimum order value for *italic printed* article numbers (see page 178).

STA	= steel wire
STM	= brass coated steel
ROF	= stainless steel wire
MES	= brass wire
PP	= polypropylene
PA	= polyamide
PE	= polyethylene
FIB	= fibre
ROS	= horse hair
SIC	= silicon carbide bristles
AO	= aluminium oxide bristles

Enquiry for Lath Brushes

Drawing / description of application

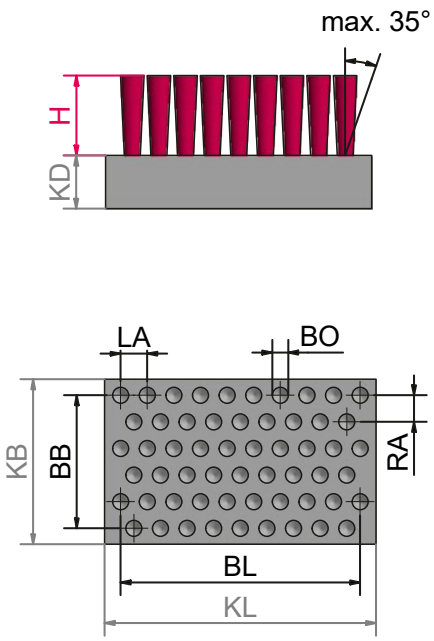

Sender: company, contact person

Inquiries and Infos:
Phone: +49 9082 707-0 info@lessmann.com
Fax: +49 9082 707-76 www.lessmann.com

Piece number _____

Brush Application ☐ dry ☐ wet
- ☐ caulk
- ☐ cleaning
- ☐ fix
- ☐ transporting
- ☐ others _____

Material to be treated_____°C Temperature
- ☐ steel
- ☐ aluminium
- ☐ wood
- ☐ stainless steel
- ☐ plastic
- ☐ others _____

Filling material
- ☐ steel
- ☐ brass coated steel
- ☐ brass
- ☐ stainless steel
- ☐ polypropylene
- ☐ polyethylene
- ☐ polyamide
- ☐ silicon carbide bristles (SIC)
- ☐ aluminium oxide bristles (AO)
- ☐ fibre
- ☐ horse hair
- ☐ others _____

Diameter of filling material _____

Filling density

☐ light ☐ medium ☐ close

Filling placement

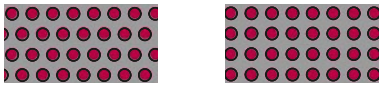

☐ **added** ☐ **straight**

Please mention measurements according to drawing (mm)

KL	total length	_____	mm
KB	total width	_____	mm
KD	body thickness	_____	mm
BL	occupied length	_____	mm
BB	occupied width	_____	mm
H	trim height	_____	mm
Deviation of the Bristles		_____	°

Body material
- ☐ polypropylene (standard)
- ☐ other _____

Wheel Brushes and Wide Face Brushes

Staple Set Wheel and Roller Brushes – Measurements							
D	**KD**	**KL**	**A**	**d**	Body	Filling	Filling
mm	mm	mm	mm	mm	Material	Material	Density
45 – 440 steel 45 – 500 plastic	25 – 250	5 – 800	3 – 780	freely selectable	PP, PE, PA, Wood	STA, STM, MES, ROF, PP, PE, PA, FIB, ROS, SIC, AO	thin, mean, dense
Standard body diameter (on stock) in body material PP							
50, 80, 100, 140							

Staple Set Wheel and Roller Brushes
These brushes are used for cleaning, deburring, surface finishing, structurizing, smoothing and transporting.
The brush body is of wood or plastic. The filling material is determined by the brushes purpose. Please also consider temperature, chemical and mechanical characteristics during use. Filling lenght, filling material, filling diameter and filling density are significant for the mode of action of the brush.
The density of the filling material can be varied by the diameter and the distance of and from the hole.
The staple set wheel and roller brushes are available with bore or arbor absorption, depending on the customers' specification.
The mentioned data in the chart should support you defining the right brush for your application.
For further information or support do not hesitate to contact us by e-mail, phone or fax. We will be very pleased to support you.

Note:
For applications which have a high mechanical load on the brushes we advise our wheel and roller brushes with crimped or knotted wire (chapters „Wheel Brushes" & „Deburring Brushes" in this catalogue).

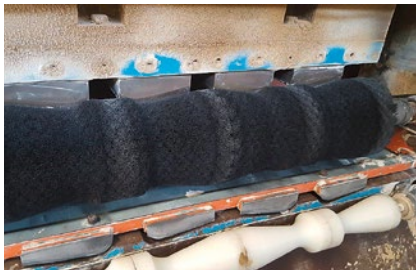

As required the stocked standard bodies could be reworked (turned, drilled out) to et further dimensions

Item Nos. in bold are available ex stock.
Consider our minimum order value for *italic printed* article numbers (see page 178).

STA	= steel wire
STM	= brass coated steel
ROF	= stainless steel wire
MES	= brass wire
PP	= polypropylene
PA	= polyamide
PE	= polyethylene
FIB	= fibre
ROS	= horse hair
SIC	= silicon carbide bristles
AO	= aluminium oxide bristles

Enquiry for punched Wheel and Wide Face Brushes

Drawing / description of application

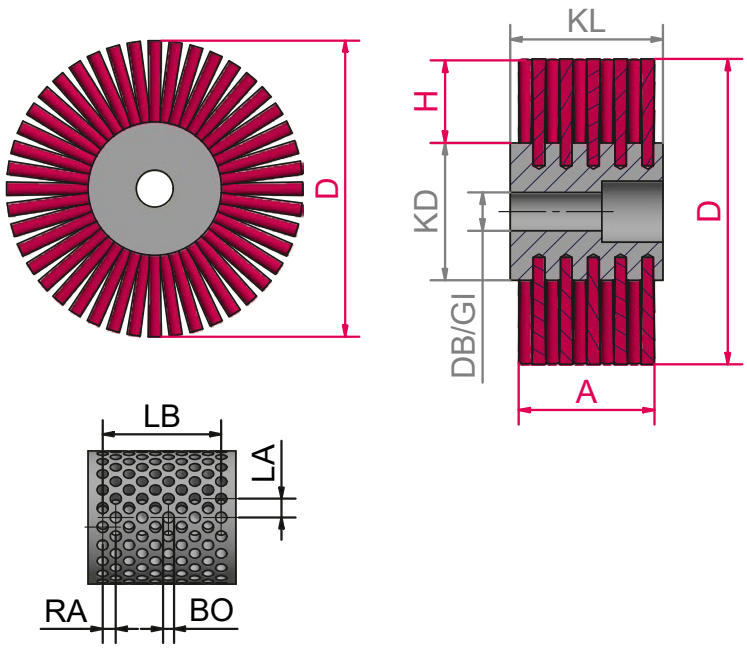

Sender: company, contact person

Piece number_____

Brush Application ☐ dry ☐ wet

- ☐ deburring
- ☐ cleaning
- ☐ roughening / structuring
- ☐ transporting
- ☐ others _____

Material to be treated_____°C Temperature

- ☐ steel
- ☐ aluminium
- ☐ wood
- ☐ stainless steel
- ☐ plastic
- ☐ others _____

Filling material

- ☐ steel
- ☐ brass coated steel
- ☐ brass
- ☐ stainless steel
- ☐ polypropylene
- ☐ polyethylene
- ☐ plyamide
- ☐ silicon carbide bristles (SIC)
- ☐ aluminium oxide bristles (AO)
- ☐ fibre
- ☐ horse hair
- ☐ others _____

Diameter of filling material _____

Filling density

☐ light ☐ medium ☐ close

Filling design

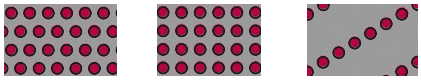

☐ **added** ☐ **straight** ☐ **spirally**

Please mention measurements according to drawing (mm)

D	outer diameter	_____	mm
KD	body diameter	_____	mm
KL	body lenght	_____	mm
A	occupied width	_____	mm
DB/GI	bore	_____	mm

Body material

- ☐ polypropylene (standard)
- ☐ other _____

Inquiries and Infos:
Phone: +49 9082 707-0 info@lessmann.com
Fax: +49 9082 707-76 www.lessmann.com

LESSMANN®

THE GERMAN BRUSH COMPANY

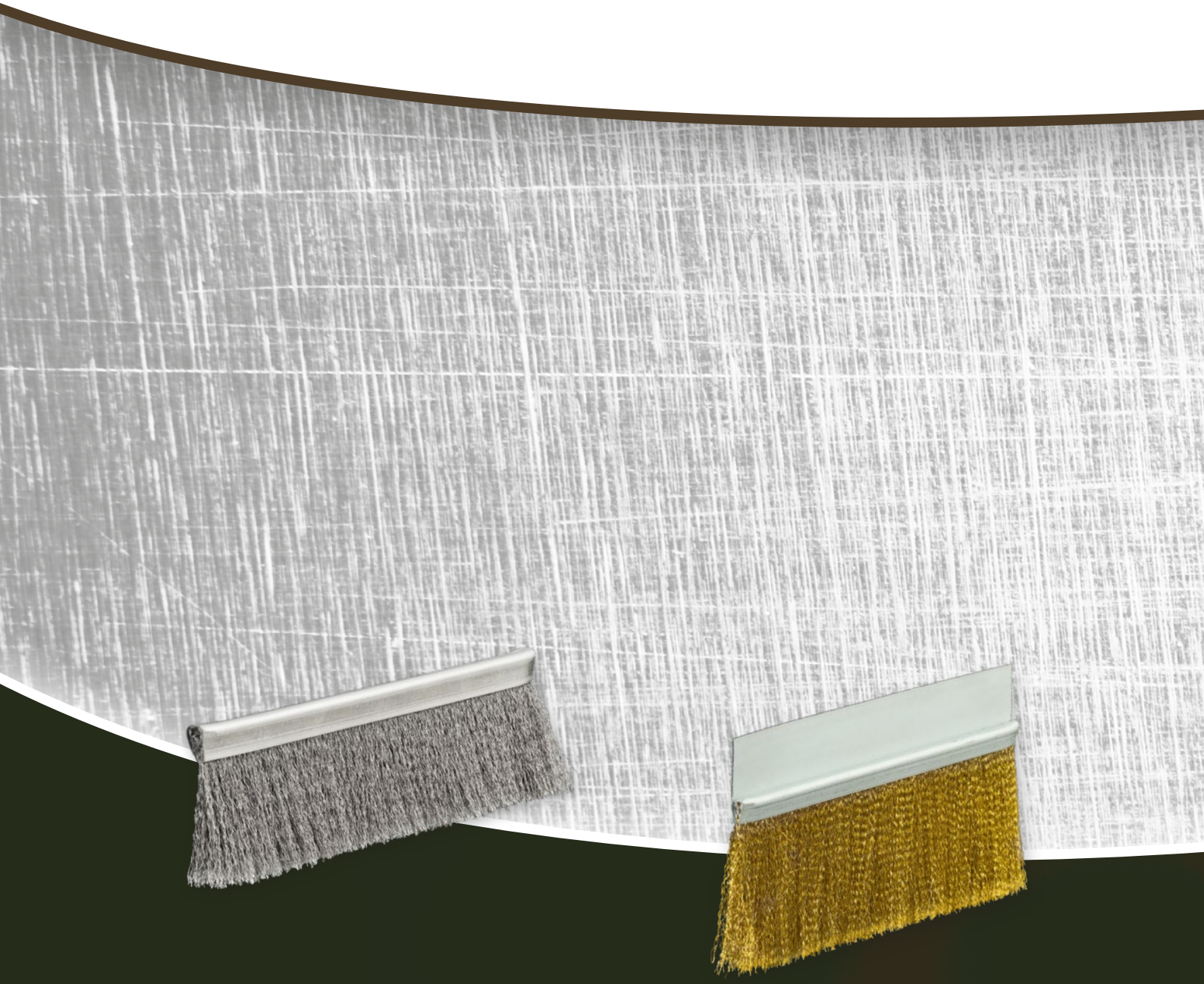

STRIP BRUSHES

09

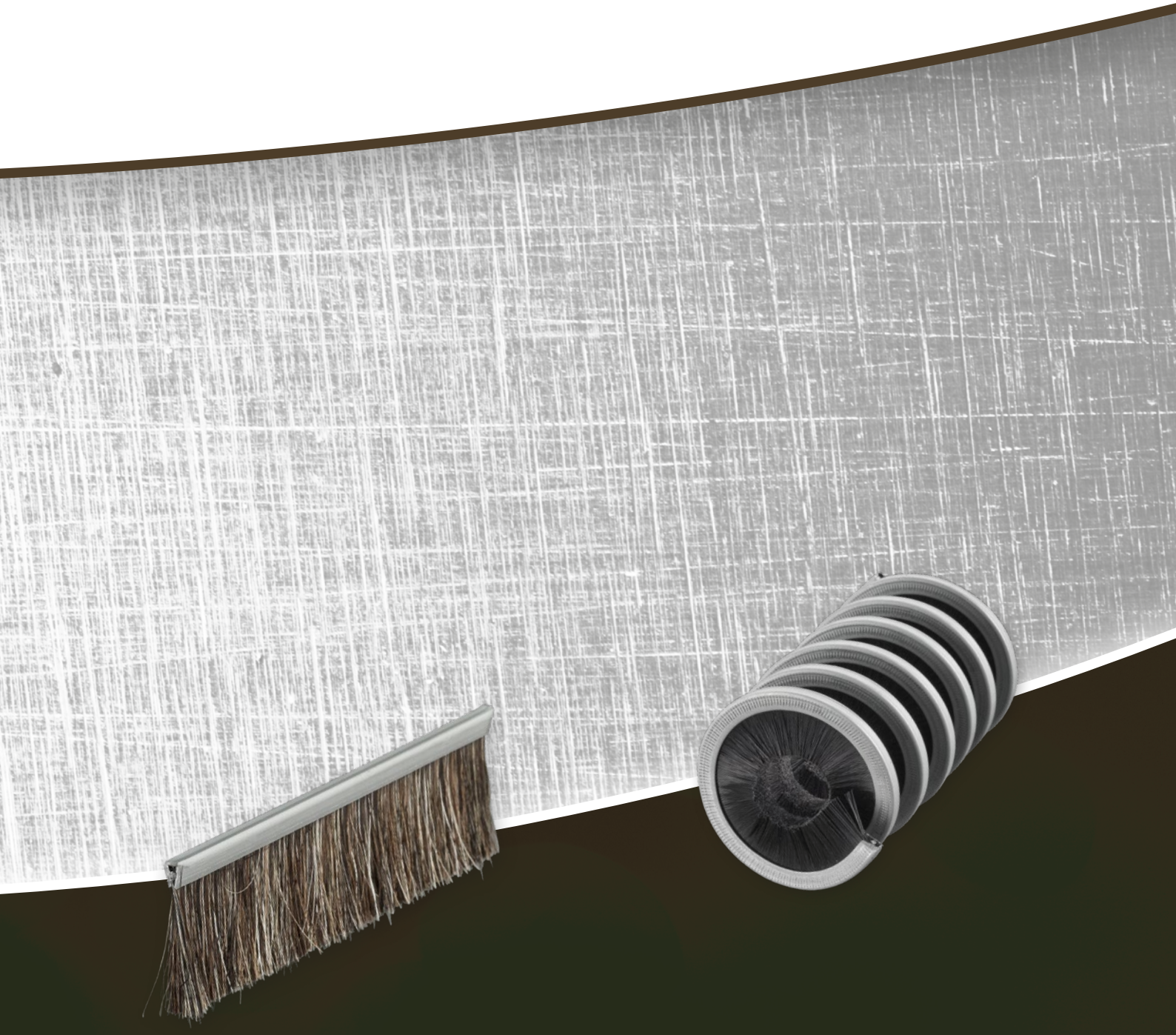

Strip Brushes

Strip brushes
Strip brushes can be used in many ways. Strip brushes have very dense and close fillings and thus they can help to save energy with long lifetime.

They seal gates and doors and prevent of infiltration, cold, humidity, leaves and dirt. They also protect moving parts (installation in machines and systems) from dust and other undesirable particles. Strip brushes also can be used for transport, guiding and securing of sensitive objects. Strip brushes from Lessmann are available in different shapes and with different adapters and filling materials.

Filling materials
All LESSMANN strip brushes are available with the following filling materials:

Natural hair:
Horse hair, grey and black

Highly effective and the most used material of filling for sealing gates and both hinged doors and sliding doors. This type of filling can be used in wet and dry areas and even at high temperatures (up to 150 °C). Their static charge is low. As standard, we use a mixture of 70 % horsehair and 30 % polyethylene.

The color specification „grey" (top) refers to light horsehair, „black" (bottom) refers to dark horsehair. However, since it is a natural material, color variations may occur.

Synthetic filaments:

- Polypropylene PP,
  Ø 0.15 – 3 mm, white and black.

  Inexpensive bristle for many uses, does not absorb water, retains initial rigidity in wet environments, low bend recovery.

- Polyamide PA,
  Ø 0.08 – 3 mm, white and black.
  Available in all grades. Good heat and wear resistance, good bend recovery.
  PA 6.6: Good bend recovery, good abrasion resistance, water absorption up to max. 10 %.
  PA 6.12 (ideally suited for use in wet environments): Flexible and excellent bend recovery, high abrasion resistance, water absorption up to max. 3 %.

- Polyester (PBT),
  Ø 0.08 – 3 mm, black, white, transparent.
  Lower water absorption than PA 6.12, very good bend recovery, good chemical resistance.

Wires:

- Steel wire

  Good mechanical properties, good wear resistance, temperature resistance (up to approx. 300 °C).
  Suitable for deburring, derusting, roughening and paint removal.

- Stainless steel wire

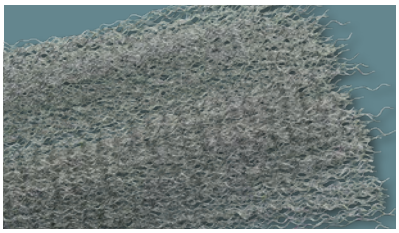

  Usable in high-temperature range (up to approx. 400 °C), corrosion-resistant.

- Brass wire

  Softer, therefore very suitable for working on soft woods and sensitive metal surfaces, temperature resistant (up to approx. 200 °C).

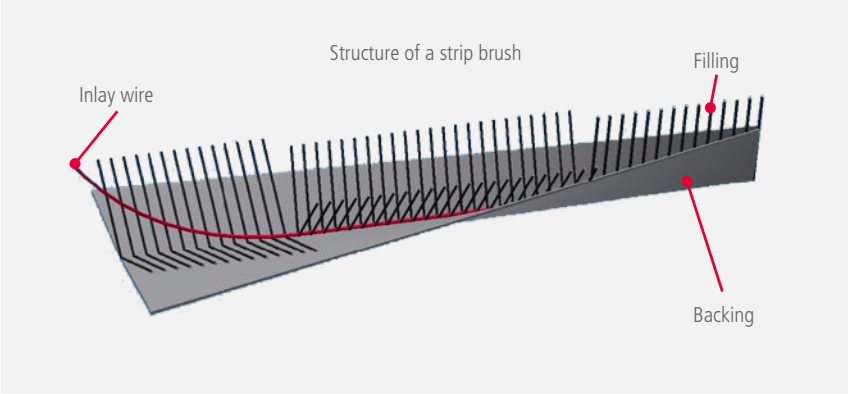

Standard backing
The filling materials of strip brushes will be bound in a U-shaped metal strip.

We offer following backings:
- Zinc-plated steel plate

- Stainless steel plate

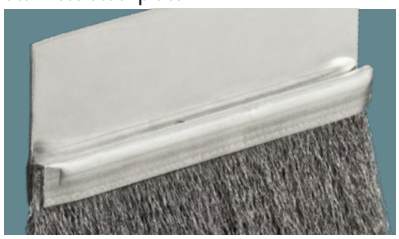

- Brass strip (only for selected brush types, please inquire)

- Other backing materials available on request.

Profiles
In general, we supply our strip brushes in holding profiles made of high-quality, untreated aluminum, both type „h" / A and type „F" / AG.

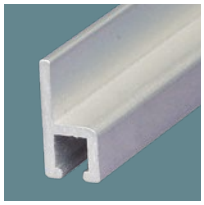
h Profile / Type A

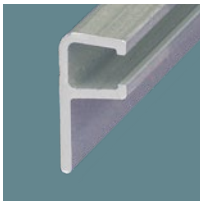
F Profile / Type AG

On request, the profiles are also available with anodizing and colored coatings:
- Silver (C-0)

- Bronze (C-34)

- Black (C-35)

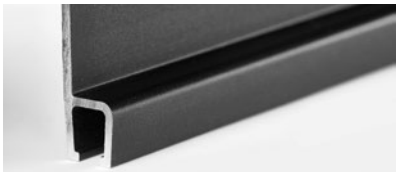

- Powder coated profiles in different colours

Other natural hair, bristles, fibers, plant fibers, plastic bristles and wires in different variants available on request.

The length of profiles and brushes is limited to max. 5 000 mm due to shipping restrictions.

Ordering information
For all strip brushes, please **always indicate in addition** to the article number
- the desired trim height (BH)
- the total length (GL)

We will automatically select the optimum filament diameter for you based on the fill height.
The given article numbers always refer to a brush without a frame coating.
For all other versions, please use the inquiry form on pages 171/172.

You can also find our request forms in the respective category at: www.lessmann.com/en/Products

Sealing brushes straight fittings

Sealing brushes straight						ROS grey		ROS black		PA 6.6 black		
Type	RB	SH	FH	H	GH	Backing STV	Backing ROF	Backing STV	Backing ROF	Backing STV	Backing ROF	Filament Ø
	mm	mm	mm	mm	mm	Art. No.	Art. No.	Art. No.	Art. No.	Art. No.	Art. No.	mm
FH 17	6	7	17	8 – 19	max. 36	220.353.10	230.453.10	220.353.00	230.453.00	220.323.00	230.423.00	0.15
				20 – 39	max. 56					220.326.00	230.426.00	0.25
				40 – 79	max. 96					220.329.00	230.429.00	0.40
				80 – 100	max. 117	–	–	–	–	220.32C.00	230.42C.00	0.50
FH 22	6	7	22	8 – 19	max. 41	221.353.10	231.453.10	221.353.00	231.453.00	221.323.00	231.423.00	0.15
				20 – 39	max. 61					221.326.00	231.426.00	0.25
				40 – 79	max. 101					221.329.00	231.429.00	0.40
				80 – 100	max. 122	–	–	–	–	221.32C.00	231.42C.00	0.50
FH 25	6	7	25	8 – 19	max. 44	222.353.10	232.453.10	222.353.00	232.453.00	222.323.00	232.423.00	0.15
				20 – 39	max. 64					222.326.00	232.426.00	0.25
				40 – 79	max. 104					222.329.00	232.429.00	0.40
				80 – 100	max. 125	–	–	–	–	222.32C.00	232.42C.00	0.50
FH 30	6	7	30	8 – 19	max. 49	223.353.10	233.453.10	223.353.00	233.453.00	223.323.00	233.423.00	0.15
				20 – 39	max. 69					223.326.00	233.426.00	0.25
				40 – 79	max. 109					223.329.00	233.429.00	0.40
				80 – 100	max. 130	–	–	–	–	223.32C.00	233.42C.00	0.50
FH 40	6	7	40	8 – 19	max. 59	224.353.10	234.453.10	224.353.00	234.453.00	224.323.00	234.423.00	0.15
				20 – 39	max. 79					224.326.00	234.426.00	0.25
				40 – 79	max. 119					224.329.00	234.429.00	0.40
				80 – 100	max. 140	–	–	–	–	224.32C.00	234.42C.00	0.50
FH 40/D	9	10	40	30 – 99	max. 139	225.553.10	235.653.10	225.553.00	235.653.00	225.529.00	235.629.00	0.40
				100 – 149	max. 189	–	–	–	–	225.52E.00	235.62E.00	0.60
				150 – 300	max. 340					225.52J.00	235.62J.00	0.80
				301 – 500	max. 540					on demand*	on demand*	–
FH 50/D	9	10	50	30 – 99	max. 149	226.553.10	236.653.10	226.553.00	236.653.00	226.529.00	236.629.00	0.40
				100 – 149	max. 199	–	–	–	–	226.52E.00	236.62E.00	0.60
				150 – 300	max. 350					226.52J.00	236.62J.00	0.80
				301 – 500	max. 540					on demand*	on demand*	–

* additional over-shearing of the bristles possible on request.

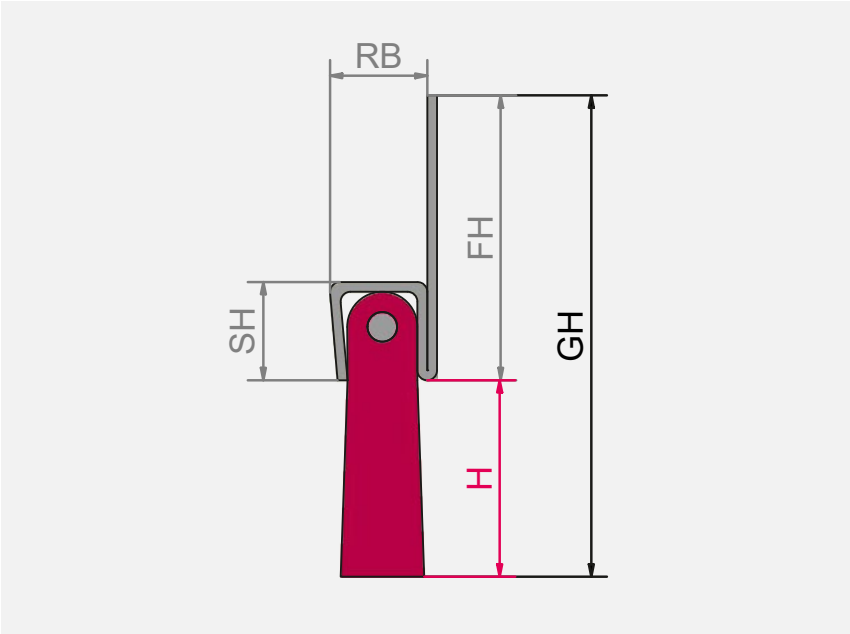

Ordering information
For all strip brushes, please **always indicate in addition** to the article number
- the desired trim height (H)
- the total length (GL)

We will automatically select the optimum filament diameter for you based on the fill height.
The given article numbers always refer to a brush without a frame coating.
For all other versions, please use the inquiry form on page 171.

For *items printed in italics* consider our minimum order value (see page 178).

PA	= Polyamide
ROS	= Horse hair (mixed with 30% Polyethylene)
STV	= Zinc-plated steel
ROF	= Stainless steel

Sealing brushes straight
We offer sealing brushes in different sizes as well as different backing width and length of the legs. The sealing brushes can be mounted directly. Depending on the brush application we offer different filling materials.

On request we can produce the profiles with perforation or/and notches at the profile legs.

The brushes type „FH 40/D" and „FH 50/D" are produced with a thicker metal sheet and are therefore much more stable and resistant than the standard types.

Sealing brushes angled fittings

Sealing brushes angled						ROS grey		ROS black		PA 6.6 black		
Type	RB	SH	SL	H	GH	Backing STV	Backing ROF	Backing STV	Backing ROF	Backing STV	Backing ROF	Filament Ø
	mm	mm	mm	mm	mm	Art. No.	Art. No.	Art. No.	Art. No.	Art. No.	Art. No.	mm
SL 16	6	7	16	8–19	max. 26	*240.353.10*	*250.453.10*	*240.353.00*	*250.453.00*	*240.323.00*	*250.423.00*	0.15
				20–39	max. 46					*240.326.00*	*250.426.00*	0.25
				40–79	max. 86					*240.329.00*	*250.429.00*	0.40
				80–100	max. 107	–	–	–	–	*240.32C.00*	*250.42C.00*	0.50
SL 21	6	7	21	8–19	max. 26	*241.353.10*	*251.453.10*	*241.353.00*	*251.453.00*	*241.323.00*	*251.423.00*	0.15
				20–39	max. 46					*241.326.00*	*251.426.00*	0.25
				40–79	max. 86					*241.329.00*	*251.429.00*	0.40
				80–100	max. 107	–	–	–	–	*241.32C.00*	*251.42C.00*	0.50
SL 24	6	7	24	8–19	max. 26	*242.353.10*	*252.453.10*	*242.353.00*	*252.453.00*	*242.323.00*	*252.423.00*	0.15
				20–39	max. 46					*242.326.00*	*252.426.00*	0.25
				40–79	max. 86					*242.329.00*	*252.429.00*	0.40
				80–100	max. 107	–	–	–	–	*242.32C.00*	*252.42C.00*	0.50
SL 29	6	7	29	8–19	max. 26	*243.353.10*	*253.453.10*	*243.353.00*	*253.453.00*	*243.323.00*	*253.423.00*	0.15
				20–39	max. 46					*243.326.00*	*253.426.00*	0.25
				40–79	max. 86					*243.329.00*	*253.429.00*	0.40
				80–100	max. 107	–	–	–	–	*243.32C.00*	*253.42C.00*	0.50
SL 39	6	7	39	8–19	max. 26	*244.353.10*	*254.453.10*	*244.353.00*	*254.453.00*	*244.323.00*	*254.423.00*	0.15
				20–39	max. 46					*244.326.00*	*254.426.00*	0.25
				40–79	max. 86					*244.329.00*	*254.429.00*	0.40
				80–100	max. 107	–	–	–	–	*244.32C.00*	*254.42C.00*	0.50
SL 39/D	9	10	39	30–99	max. 106	*245.553.10*	*255.653.10*	*245.553.00*	*255.653.00*	*245.529.00*	*255.629.00*	0.40
				100–149	max. 156	–	–	–	–	*245.52E.00*	*255.62E.00*	0.60
				150–300	max. 307					*245.52J.00*	*255.62J.00*	0.80
				301–500	max. 510					*on demand**	*on demand**	–
SL 49/D	9	10	49	30–99	max. 106	*246.553.10*	*256.653.10*	*246.553.00*	*256.653.00*	*246.529.00*	*256.629.00*	0.40
				100–149	max. 156	–	–	–	–	*246.52E.00*	*256.62E.00*	0.60
				150–300	max. 307					*246.52J.00*	*256.62J.00*	0.80
				301–500	max. 510					*on demand**	*on demand**	–

* additional over-shearing of the bristles possible on request.

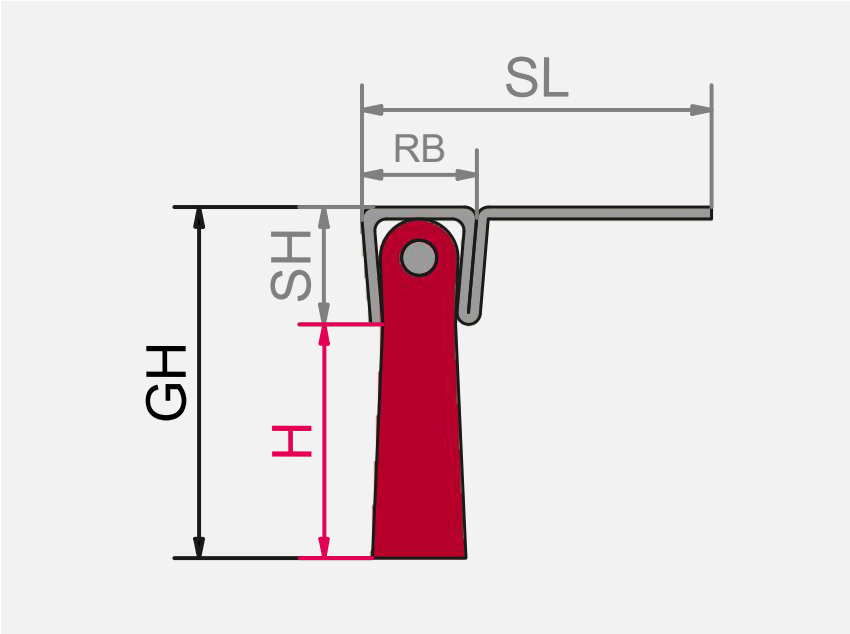

Ordering information
For all strip brushes, please **always indicate in addition** to the article number
- the desired trim height (H)
- the total length (GL)

We will automatically select the optimum filament diameter for you based on the fill height.
The given article numbers always refer to a brush without a frame coating.
For all other versions, please use the inquiry form on page 171.

For *items printed in italics* consider our minimum order value (see page 178).

PA	= Polyamide
ROS	= Horse hair (mixed with 30% Polyethylene)
STV	= Zinc-plated steel
ROF	= Stainless steel

Sealing brushes angled
We offer sealing brushes in different sizes as well as different backing width and length of the legs. The sealing brushes can be mounted directly. Depending on the brush application we offer different filling materials.

On request we can produce the profiles with perforation or/and notches at the profile legs.

The brushes type „SL 39/D" and „SL 49/D" are produced with a thicker metal sheet and are therefore much more stable and resistant than the standard types.

Strip brushes for slots / profiles

Strip brushes for slots / profiles					ROS grey		ROS black		PA 6.6 black		
Type	RB	SH	H	GH	Backing STV	Backing ROF	Backing STV	Backing ROF	Backing STV	Backing ROF	Filament Ø
	mm	mm	mm	mm	Art. No.	Art. No.	Art. No.	Art. No.	Art. No.	Art. No.	mm
2	1.8 – 2.1	max. 2.2	6 – 28	max. 30	*200.C53.10*	*210.D53.10*	*200.C53.00*	*210.D53.00*	*200.C21.00*	*210.D21.00*	0.10
2.5	2.4 – 2.7	max. 2.9	7 – 50	max. 53	*201.C53.10*	*211.D53.10*	*201.C53.00*	*211.D53.00*	*201.C23.00*	*211.D23.00*	0.15
			8 – 19	max. 22					*202.821.00*	*212.721.00*	0.10
3	2.8 – 3.2	max. 3.1	20 – 39	max. 42	*202.853.10*	*212.753.10*	*202.853.00*	*212.753.00*	*202.823.00*	*212.723.00*	0.15
			40 – 60	max. 63					*202.825.00*	*212.725.00*	0.20
			8 – 19	max. 23					*203.821.00*	*213.721.00*	0.10
3.5	3.3 – 3.7	max. 4.3	20 – 39	max. 43	*203.853.10*	*213.753.10*	*203.853.00*	*213.753.00*	*203.823.00*	*213.723.00*	0.15
			40 – 65	max. 69					*203.825.00*	*213.725.00*	0.20
			6 – 19	max. 23					*204.823.00*	*214.723.00*	0.15
4	3.7 – 4.2	max. 4.2	20 – 39	max. 43	*204.853.10*	*214.753.10*	*204.853.00*	*214.753.00*	*204.826.00*	*214.726.00*	0.25
			40 – 60	max. 64					*204.827.00*	*214.727.00*	0.30
			6 – 24	max. 29					*20J.123.00*	*21J.223.00*	0.15
4.5	4.2 – 4.5	max. 5.2	25 – 59	max. 64	*20J.153.10*	*21J.253.10*	*20J.153.00*	*21J.253.00*	*20J.126.00*	*21J.226.00*	0.25
			60 – 90	max. 95					*20J.127.00*	*21J.227.00*	0.30
			6 – 24	max. 29					*206.123.00*	*216.223.00*	0.15
5	4.6 – 5.2	max. 5.3	25 – 59	max. 64	*206.153.10*	*216.253.10*	*206.153.00*	*216.253.00*	*206.126.00*	*216.226.00*	0.25
			60 – 90	max. 95					*206.127.00*	*216.227.00*	0.30
			30 – 100	max. 110					*207.A29.00*	*217.B29.00*	0.40
8	7.5 – 8.3	max. 9.5	101 – 300	max. 310	*207.A53.10*	*217.B53.10*	*207.A53.00*	*217.B53.00*	*207.A2E.00*	*217.B2E.00*	0.60
			301 – 550	max. 560					*207.A2J.00*	*217.B2J.00*	0.80
			30 – 100	max. 110					*208.A29.00*	*218.B29.00*	0.40
10	9.7 – 10.5	max. 10.5	101 – 300	max. 310	*208.A53.10*	*218.B53.10*	*208.A53.00*	*218.B53.00*	*208.A2E.00*	*218.B2E.00*	0.60
			301 – 550	max. 560					*208.A2J.00*	*218.B2J.00*	0.80

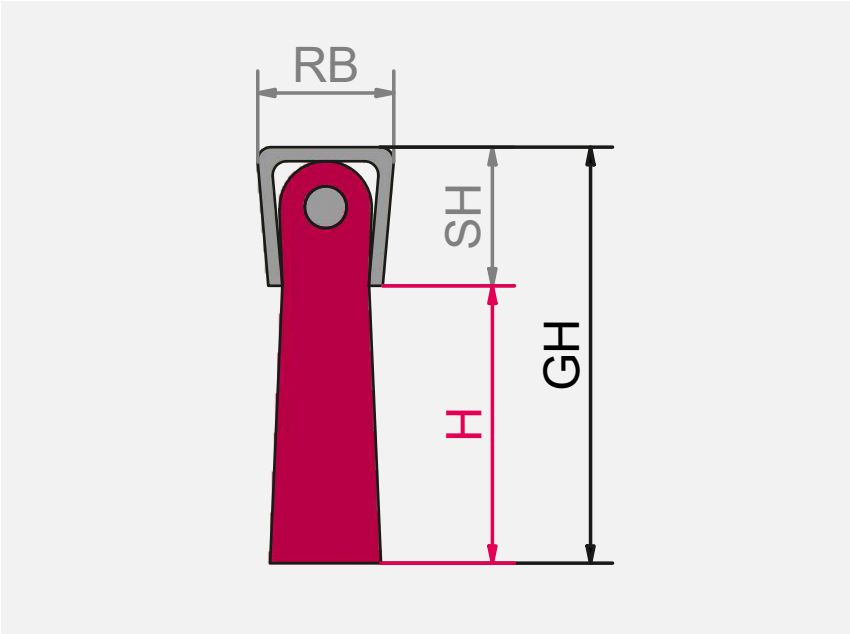

Strip brushes for slots / profiles
We offer strip brushes in different sizes as well as different backing width and length of the legs. Depending on the brush application we offer different filling materials.

The mentioned dimensions vary due to the density, the thickness and the selection of the trim material. Upon request, all brushes can be adapted to existing profiles.

Ordering information
For all strip brushes, please **always indicate in addition** to the article number
- the desired trim height (H)
- the total length (GL)

We will automatically select the optimum filament diameter for you based on the fill height.
The given article numbers always refer to a brush without a frame coating.
For all other versions, please use the inquiry form on page 171.

For *items printed in italics* consider our minimum order value (see page 178).

PA	= Polyamide
ROS	= Horse hair (mixed with 30% Polyethylene)
STV	= Zinc-plated steel
ROF	= Stainless steel

Strip brushes in aluminum profile

Strip brushes in aluminum profile								ROS grey		ROS black		PA 6.6 black		
Brush type	Profile type	SH	SL	FB	FH	H	GH	Backing STV	Backing ROF	Backing STV	Backing ROF	Backing STV	Backing ROF	Filament Ø
		mm	mm	mm	mm	mm	mm	Art. No.	Art. No.	Art. No.	Art. No.	Art. No.	Art. No.	mm
2.5	13.5 A	4.0	–	4.4	13.5	4–47	max. 61	*261.C53.10*	*271.D53.10*	*261.C53.00*	*271.D53.00*	*261.C23.00*	*271.D23.00*	0.15
4	15 A	7.0	–	7.3	15	3–16	max. 31	*264.853.10*	*274.753.10*	*264.853.00*	*274.753.00*	*264.823.00*	*274.723.00*	0.15
						17–36	max. 51					*264.826.00*	*274.726.00*	0.25
						37–57	max. 72					*264.827.00*	*274.727.00*	0.30
	16 AG	–	16.0	7.3	7.0	3–16	max. 23	*265.853.10*	*275.753.10*	*265.853.00*	*275.753.00*	*265.823.00*	*275.723.00*	0.15
						17–36	max. 43					*265.826.00*	*275.726.00*	0.25
						37–57	max. 64					*265.827.00*	*275.727.00*	0.30
5	40/5 A	9.2	–	8.8	40	3–21	max. 61	*269.153.10*	*279.253.10*	*269.153.00*	*279.253.00*	*269.123.00*	*279.223.00*	0.15
						22–56	max. 96					*269.126.00*	*279.226.00*	0.25
						57–87	max. 127					*269.127.00*	*279.227.00*	0.30
	25 A	9.2	–	8.8	25	3–21	max. 46	*262.153.10*	*272.253.10*	*262.153.00*	*272.253.00*	*262.123.00*	*272.223.00*	0.15
						22–56	max. 81					*262.126.00*	*272.226.00*	0.25
						57–87	max. 112					*262.127.00*	*272.227.00*	0.30
	17 A	9.2	–	8.8	17	3–21	max. 38	*266.153.10*	*276.253.10*	*266.153.00*	*276.253.00*	*266.123.00*	*276.223.00*	0.15
						22–56	max. 73					*266.126.00*	*276.226.00*	0.25
						57–87	max. 104					*266.127.00*	*276.227.00*	0.30
	25 AG	–	25	8.5	8.5	3–21	max. 30	*263.153.10*	*273.253.10*	*263.153.00*	*273.253.00*	*263.123.00*	*273.223.00*	0.15
						22–56	max. 65					*263.126.00*	*273.226.00*	0.25
						57–87	max. 96					*263.127.00*	*273.227.00*	0.30
	18 AG	–	18	8.5	8.5	3–21	max. 30	*260.153.10*	*270.253.10*	*260.153.00*	*270.253.00*	*260.123.00*	*270.223.00*	0.15
						22–56	max. 65					*260.126.00*	*270.226.00*	0.25
						57–87	max. 96					*260.127.00*	*270.227.00*	0.30
8	40/8 A	13.5	–	12.5	40	27–97	max. 137	*267.A53.10*	*277.B53.10*	*267.A53.00*	*277.B53.00*	*267.A29.00*	*277.B29.00*	0.40
						98–297	max. 337					*267.A2E.00*	*277.B2E.00*	0.60
						298–547	max. 587					*267.A2J.00*	*277.B2J.00*	0.80
	40/8 AG	–	40	12.5	13.5	27–97	max. 111	*268.A53.10*	*278.B53.10*	*268.A53.00*	*278.B53.00*	*268.A29.00*	*278.B29.00*	0.40
						98–297	max. 311					*268.A2E.00*	*278.B2E.00*	0.60
						298–547	max. 561					*268.A2J.00*	*278.B2J.00*	0.80

h-profile / Type A

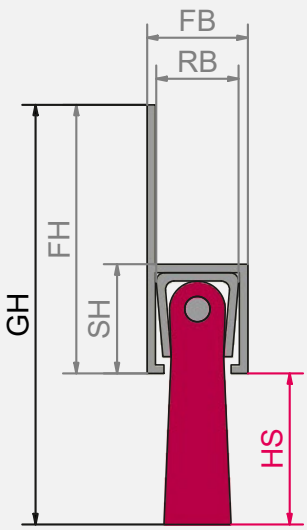

F-profile / Type AG

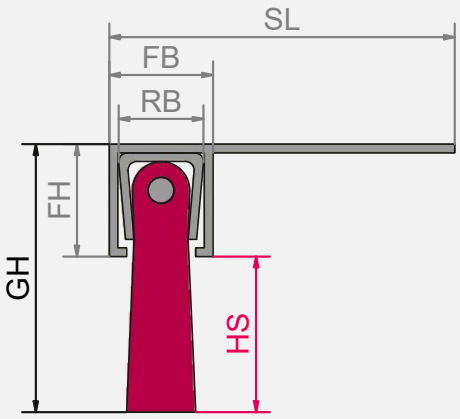

Profiles
We supply h- and F-profiles made of aluminum for strip brushes. On request we can produce the profiles with perforation or/and notches at the profile legs as well as cut them on requested measurement. Anodized and powder coated profiles are also available in different colors upon request.

Standard lenghts of the profiles:
1 000 mm, 1 100 mm, 1 200 mm, 1 300 mm, 2 000 mm, 2 500 mm, 3 000 mm.

For *items printed in italics* consider our minimum order value (see page 178).

PA	= Polyamide
ROS	= Horse hair (mixed with 30% Polyethylene)
STV	= Zinc-plated steel
ROF	= Stainless steel

Of course, you can get all profiles individually, without brush, as well.

Ordering information
For all strip brushes, please **always indicate in addition** to the article number
- the desired trim height (H)
- the total length (GL)

We will automatically select the optimum filament diameter for you based on the fill height.
The given article numbers always refer to a brush without a frame coating.
For all other versions, please use the inquiry form on page 171.

Shaped strip brushes, filling facing outwards

Shaped strip brushes. filling facing outwards							ROS black or grey		PA 6.6 black		
Type	RB	SH	DI	DA	H	GH	Backing STV	Backing ROF	Backing STV	Backing ROF	Filament Ø
	mm	mm	mm	mm	mm	mm	Art. No.	Art. No.	Art. No.	Art. No.	mm
2.5	2.4–2.7	max. 2.9	6–80	26–186	7–50	max. 53	*on demand*	*on demand*	*on demand*	*on demand*	0.15
3	2.8–3.2	max. 3.1	12–80	34–206	8–19	max. 22	*on demand*	*on demand*	*on demand*	*on demand*	0.10
					20–39	max. 42			*on demand*	*on demand*	0.15
					40–60	max. 63			*on demand*	*on demand*	0.20
4	3.7–4.2	max. 4.2	20–140	40–266	6–19	max. 23	*on demand*	*on demand*	*on demand*	*on demand*	0.15
					20–39	max. 43			*on demand*	*on demand*	0.25
					40–60	max. 64			*on demand*	*on demand*	0.30
5	4.6–5.2	max. 5.3	25–140	47–326	6–24	max. 29	*on demand*	*on demand*	*on demand*	*on demand*	0.15
					25–59	max. 64			*on demand*	*on demand*	0.25
					60–90	max. 95			*on demand*	*on demand*	0.30
8	7.5–8.3	max. 9.5	80–320	160–1000	30–100	max. 110	*on demand*	*on demand*	*on demand*	*on demand*	0.40
					101–300	max. 310			*on demand*	*on demand*	0.60
					301–550	max. 560			*on demand*	*on demand*	0.80

Special shaped strip brushes
Special shaped strip brushes complement our assortment of classic strip brushes.

Spiral or ring shaped brushes are available with outward or inward facing filament.

Strip brushes with **filling facing outward** can be used for cleaning, polishing, for applying liquids, for gentle transport and for deburring.

We offer strip brushes in different sizes and backing width and height. Depending on the individual application we offer different filling materials.

Ordering information
For all shaped strip brushes, please **always indicate in addition** to the article number
- the desired trim height (H)
- inner & outer diameter
- work width

Please use the inquiry form on page 172.

We will automatically select the optimum filament diameter for you based on the fill height.

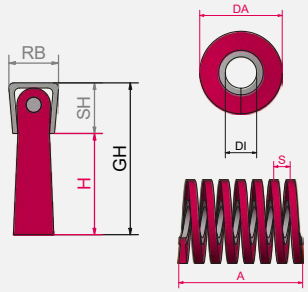

Shaped strip brushes, filling facing outwards

For *items printed in italics* consider our minimum order value (see page 178).

PA	= Polyamide
ROS	= Horse hair (mixed with 30% Polyethylene)
STV	= Zinc-plated steel
ROF	= Stainless steel

Shaped strip brushes, filling facing inwards

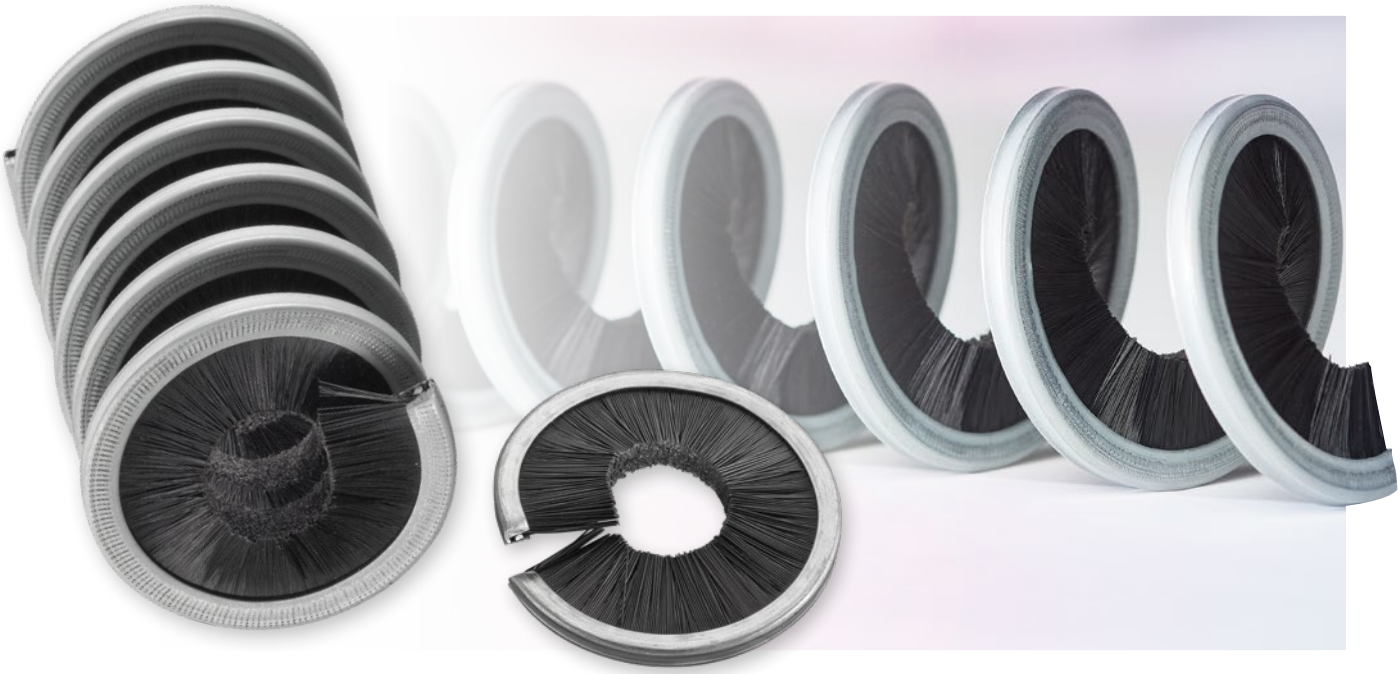

Shaped strip brushes. filling facing inwards							ROS black or grey		PA 6.6 black		
Typ	RB	SH	DI	DA	H	GH	Backing STV	Backing ROF	Backing STV	Backing ROF	Filament Ø
	mm	mm	mm	mm	mm	mm	Art. No.	Art. No.	Art. No.	Art. No.	mm
2.5	2.4–2.7	max. 2.9	0–240	20–260	7–50	max. 53	*on demand*	*on demand*	*on demand*	*on demand*	0.15
					8–19	max. 22			*on demand*	*on demand*	0.10
3	2.8–3.2	max. 3.1	0–260	22–290	20–39	max. 42	*on demand*	*on demand*	*on demand*	*on demand*	0.15
					40–60	max. 63			*on demand*	*on demand*	0.20
					6–19	max. 23			*on demand*	*on demand*	0.15
4	3.7–4.2	max. 4.2	0–320	20–340	20–39	max. 43	*on demand*	*on demand*	*on demand*	*on demand*	0.25
					40–60	max. 64			*on demand*	*on demand*	0.30
					6–24	max. 29			*on demand*	*on demand*	0.15
5	4.6–5.2	max. 5.3	0–320	22–345	25–59	max. 64	*on demand*	*on demand*	*on demand*	*on demand*	0.25
					60–90	max. 95			*on demand*	*on demand*	0.30
					30–100	max. 110			*on demand*	*on demand*	0.40
8	7.5–8.3	max. 9.5	0–420	80–500	101–300	max. 310	*on demand*	*on demand*	*on demand*	*on demand*	0.60
					301–550	max. 560			*on demand*	*on demand*	0.80

Strip brushes with **filling facing inwards** can be used for sealing, cleaning and carrying cylindrical parts in mechanical engineering, tool manufacturing and vehicle construction.

We offer strip brushes in different sizes and backing width and height. Depending on the individual application we offer different filling materials.

Ordering information
For all shaped strip brushes, please **always indicate in addition** to the article number
- the desired trim height (H)
- inner & outer diameter
- work width

Please use the inquiry form on page 172.

We will automatically select the optimum filament diameter for you based on the fill height.

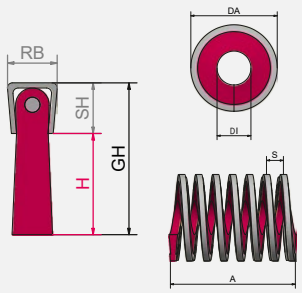

Shaped strip brushes, filling facing inwards

For *items printed in italics* consider our minimum order value (see page 178).

PA	= Polyamide
ROS	= Horse hair (mixed with 30% Polyethylene)
STV	= Zinc-plated steel
ROF	= Stainless steel

Cup shaped strip brushes

Cup shaped strip brushes						ROS black or grey		PA 6.6 black		
Type	RB	SH	DI/DA	H	GH	Backing STV	Backing ROF	Backing STV	Backing ROF	Filament Ø
	mm	mm	mm	mm	mm	Art. No.	Art. No.	Art. No.	Art. No.	mm
2.5	2.4–2.7	max. 2.9	14–120	7–50	max. 53	*on demand*	*on demand*	*on demand*	*on demand*	0.15
				8–19	max. 22			*on demand*	*on demand*	0.10
3	2.8–3.2	max. 3.1	15–130	20–39	max. 42	*on demand*	*on demand*	*on demand*	*on demand*	0.15
				40–60	max. 63			*on demand*	*on demand*	0.20
				6–19	max. 23			*on demand*	*on demand*	0.15
4	3.7–4.2	max. 4.2	25–140	20–39	max. 43	*on demand*	*on demand*	*on demand*	*on demand*	0.25
				40–60	max. 64			*on demand*	*on demand*	0.30
				6–24	max. 29			*on demand*	*on demand*	0.15
5	4.6–5.2	max. 5.3	50–180	25–59	max. 64	*on demand*	*on demand*	*on demand*	*on demand*	0.25
				60–90	max. 95			*on demand*	*on demand*	0.30
				30–100	max. 110			*on demand*	*on demand*	0.40
8	7.5–8.3	max. 9.5	90–500	101–300	max. 310	*on demand*	*on demand*	*on demand*	*on demand*	0.60
				301–550	max. 560			*on demand*	*on demand*	0.80

Cup shaped strip brushes can be used for sealing rotating tools or nozzles, for cleaning, for applying liquids and polishing surfaces.

Ordering information
For all shaped strip brushes, please **always indicate in addition** to the article number
- the desired trim height (H)
- inner & outer diameter

Please use the inquiry form on page 172.

We will automatically select the optimum filament diameter for you based on the fill height.

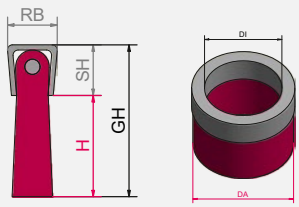

Cup shaped strip brushes

For *items printed in italics* consider our minimum order value (see page 178).

PA	= Polyamide
ROS	= Horse hair (mixed with 30% Polyethylene)
STV	= Zinc-plated steel
ROF	= Stainless steel

Inquiry for straight strip brushes

Drawing / description of application

☐ Sealing brushes straight
(Type h / FH)

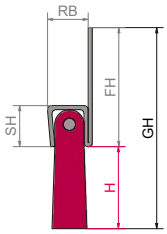

☐ Sealing brushes angled
(Type F / SL)

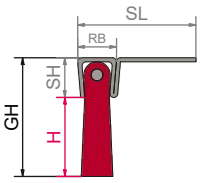

☐ Strip brushes for slots

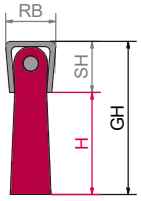

☐ Strip brushes in aluminum slot
Form/Type of profile
☐ h / A ☐ F / AG

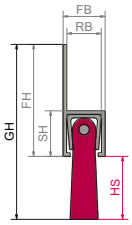

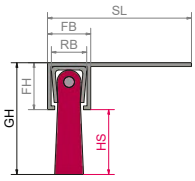

☐ Predefined perforation
☐ vertical

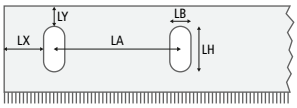

☐ horizontal

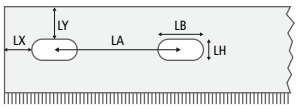

Anodization
☐ Blank / none
☐ Silver
☐ Dark bronze
☐ Black

Sender: Company, contact person

No. of pieces _____

Brush length _____ mm

Application _____ ☐ **dry** ☐ **wet**

☐ sealing
☐ sloughing
☐ cleaning
☐ deburring
☐ roughening
☐ transporting
☐ other _____

Material to be treated ____°C Temperature

☐ steel
☐ aluminum
☐ wood
☐ stainless steel
☐ plastic
☐ other _____

Filling material

☐ horse hair ☐ mixed with 30% PE ☐ pure
☐ Polyamide (PA)
☐ Polyethylene (PE)
☐ Polypropylene (PP)
☐ steel
☐ brass coated steel
☐ brass
☐ stainless steel
☐ abrasive filament (SIC)
☐ abrasive filament (AO)
☐ fibre
☐ other _____

☐ Diameter for filling material _____ mm

Please indicate the dimensions according to the technical drawing

H	filling height	_____	mm
RB	backing width	_____	mm
SH	socket height	_____	mm
GH	total height	_____	mm
FH	backing height	_____	mm
SL	socket length	_____	mm
LB	perforation width	_____	mm
LH	perforation height	_____	mm
LY	distance from upper backing edge	_____	mm
LX	distance from lateral backing edge	_____	mm
LA	hole spacing	_____	mm
+	number of holes	_____	pcs.

Inquiry for shaped strip brushes

Drawing / description of application

☐ Shaped strip brushes, filling facing outwards

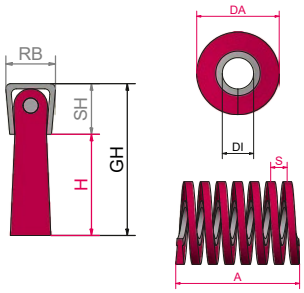

Form
☐ Spiral ☐ Ring

☐ Shaped strip brushes, filling facing inwards

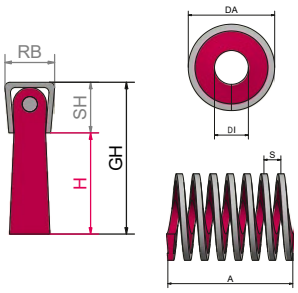

Form
☐ Spiral ☐ Ring

☐ Cup shaped strip brushes

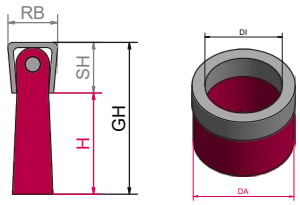

Sender: Company, contact person

No. of pieces _____

Application _____ ☐ **dry** ☐ **wet**

☐ sealing
☐ sloughing
☐ cleaning
☐ deburring
☐ roughening
☐ transporting
☐ other _____

Material to be treated ____°C Temperature

☐ steel
☐ aluminum
☐ wood
☐ stainless steel
☐ plastic
☐ other _____

Filling material

☐ horse hair ☐ mixed with 30% PE ☐ pure
☐ Polyamide (PA)
☐ Polyethylene (PE)
☐ Polypropylene (PP)
☐ steel
☐ brass coated steel
☐ brass
☐ stainless steel
☐ abrasive filament (SIC)
☐ abrasive filament (AO)
☐ fibre
☐ other _____

☐ Diameter for filling material _____ mm

Please indicate the dimensions according to the technical drawing

H filling height _____ mm
RB backing width _____ mm
SH socket height _____ mm
GH total height _____ mm
FH backing height _____ mm
SL socket length _____ mm
DI diameter inner _____ mm
DA diameter outer _____ mm
A work width _____ mm
number of windings (spiral brushes) _____ pcs.
S pitch (if required) _____ mm

Inquiries and info under: Tel.: +49 9082 707-0 Fax: +49 9082 707-76 info@lessmann.com www.lessmann.com

Enquiry for Cutback Brushes

ENQUIRY FORMS

Drawing / description of application

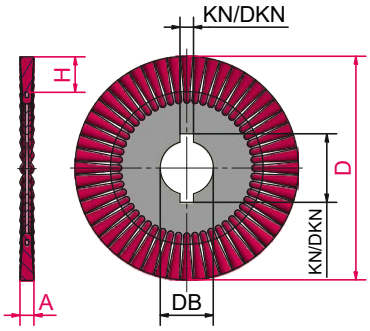

Knot type ZF

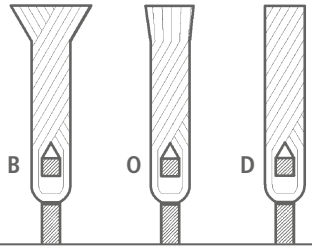

Sender: Company, contact person

Piece number _____

Brush Application ☐ dry ☐ wet

☐ removal of pipe coatings

☐ others _____

Material to be treated ____°C Temperature

☐ steel

☐ stainless steel

☐ others _____

Filling material

☐ steel

☐ brass coated steel

☐ stainless steel

Diameter of filling material:_____

Please indicate the dimensions according to the technical drawing (mm):

D	Diameter	_____	mm
DB	bore	_____	mm
DKN	double keyway	_____	mm
H	trim height	_____	mm
A	working width	_____	mm
Z	number of knots	_____	pcs.
EBR	clamping width	_____	mm

Knot type

☐ B Rose Bud

☐ O Open Knot (wire ends are cut)

☐ D Fully knotted (wire ends are cut completely)

Used machine

☐ stationary machine, Type _____

☐ others _____

Machine data

max. speed _____

Inquiries and Infos:
Phone: +49 9082 707-0 info@lessmann.com
Fax: +49 9082 707-76 www.lessmann.com

Enquiry for Wheel and Deburring Brushes

Drawing / description of application

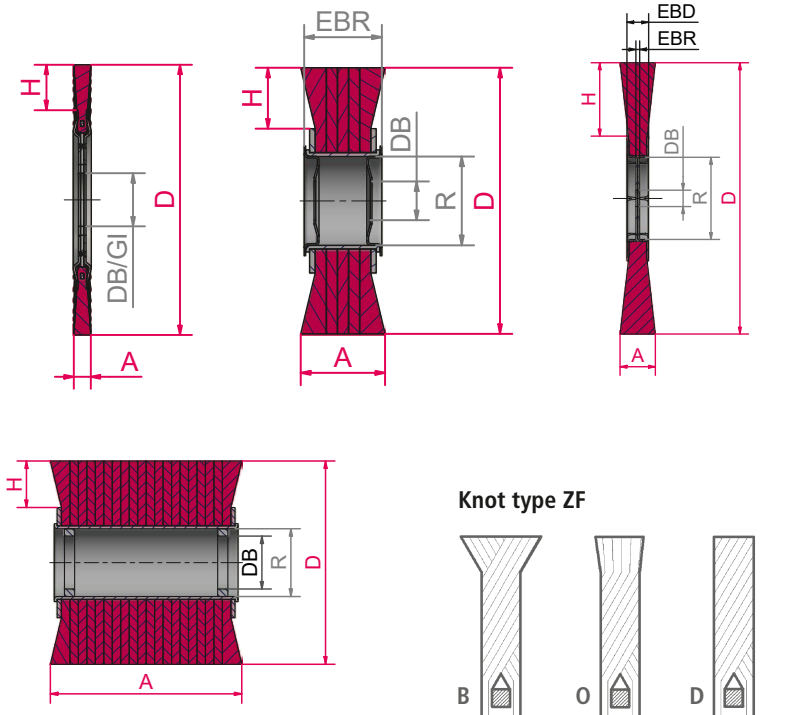

Sender: Company, contact person

Inquiries and Infos:
Phone: +49 9082 707-0 info@lessmann.com
Fax: +49 9082 707-76 www.lessmann.com

Piece number _____

Brush Application ☐ dry ☐ wet

- ☐ derusting
- ☐ removing paint
- ☐ deburring
- ☐ cleaning
- ☐ roughening / structuring
- ☐ weld dressing
- ☐ others _____

Material to be treated _____°C Temperature

- ☐ steel
- ☐ aluminium
- ☐ wood
- ☐ stainless steel
- ☐ plastic
- ☐ others _____

Filling material

- ☐ crimped ☐ knotted
- ☐ steel
- ☐ brass coated steel
- ☐ brass
- ☐ stainless steel
- ☐ polyamide
- ☐ silicon carbide bristles (SIC)
- ☐ aluminium oxide bristles (AO)

Diameter of filling material _____

Please indicate the dimensions according to the technical drawing (mm):

D Diameter _____ mm
DB bore/thread _____ mm
H trim height _____ mm
A working width _____ mm
R tube _____ mm
EBR clamping width _____ mm

Knot type if necessary (more aggressive execution)

- ☐ B Rose Bud
- ☐ O open Knot (wire ends are cut)
- ☐ D Fully knotted (wire ends are cut completely)

Used machine

- ☐ Hand-operated machine (e.g. angle grinders) _____
- ☐ stationary machine (z.B. CNC) _____
- ☐ others _____

Machine data
max. speed _____

Enquiry for Cup and Bevel Brushes

ENQUIRY FORMS

Drawing / description of application

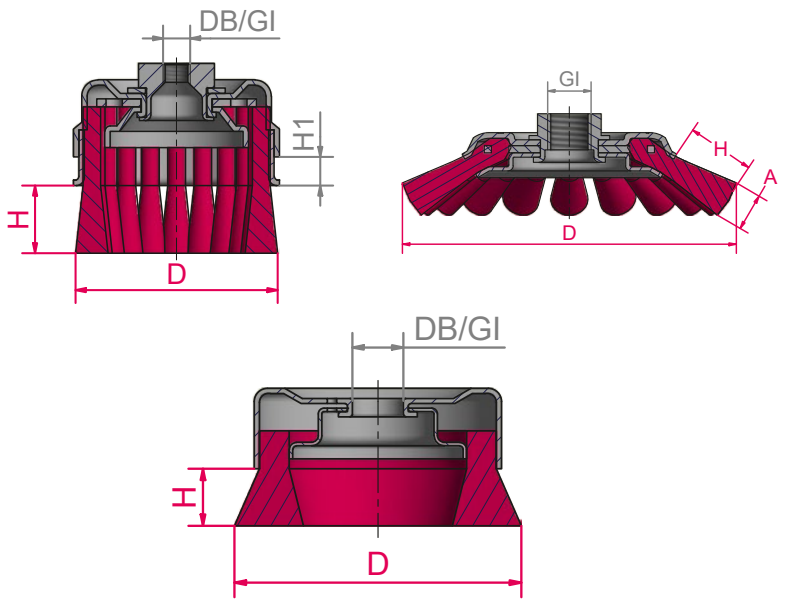

Sender: Company, contact person

Piece number _____

Brush Application ☐ dry ☐ wet

- ☐ derusting
- ☐ removing paint
- ☐ deburring
- ☐ cleaning
- ☐ weld dressing
- ☐ others _____

Material to be treated ____°C Temperature

- ☐ steel
- ☐ aluminium
- ☐ stainless steel
- ☐ others _____

Filling material

- ☐ crimped ☐ knotted
- ☐ steel
- ☐ brass coated steel
- ☐ brass
- ☐ stainless steel
- ☐ silicon carbide bristles (SIC)

Diameter of filling material _____

Please indicate the dimensions according to the technical drawing (mm):

D	Diameter	_____	mm
DB/GI	bore/thread	_____	mm
H	trim height	_____	mm
A	working width	_____	mm
H1	Height of support cuff	_____	mm

Used machine

- ☐ hand-operated machine (e.g. angle grinders)_____
- ☐ stationary machine (z.B. CNC)_____
- ☐ others _____

Machine data

max. speed _____

max. brush height _____ mm

Inquiries and Infos:
Phone: +49 9082 707-0 info@lessmann.com
Fax: +49 9082 707-76 www.lessmann.com

Enquiry for Brushes with Shank

Drawing / description of application

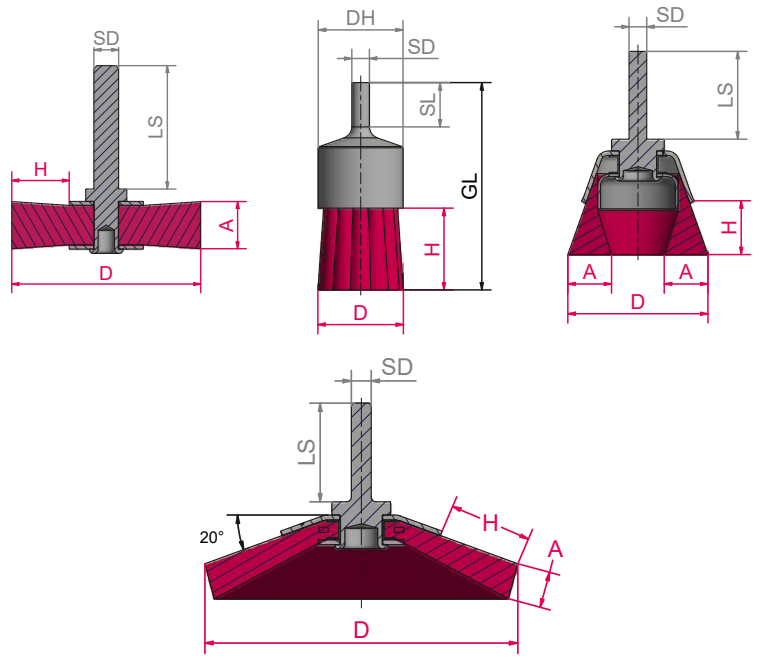

Sender: Company, contact person

Piece number _____

Brush Application ☐ dry ☐ wet

- ☐ derusting
- ☐ removing paint
- ☐ deburring
- ☐ cleaning
- ☐ roughening / structuring
- ☐ weld dressing
- ☐ others _____

Material to be treated ____°C Temperature

- ☐ steel
- ☐ aluminium
- ☐ wood
- ☐ stainless steel
- ☐ plastic
- ☐ others _____

Filling material

- ☐ crimped ☐ knotted
- ☐ steel
- ☐ brass coated steel
- ☐ brass
- ☐ stainless steel
- ☐ polyamide
- ☐ silicon carbide bristles (SIC)

Diameter of filling material _____

Please indicate the dimensions according to the technical drawing (mm): (shank standard 6 mm)

D	Diameter	_____	mm
H	trim hight	_____	mm
A	working width	_____	mm
GL	overall length	_____	mm
DH	Housing diameter	_____	mm

Used machine

- ☐ hand-operated machine (e.g. angle grinders)_____
- ☐ stationary machine (z.B. CNC)_____
- ☐ others _____

machine data

max. speed _____

Inquiries and Infos:
Phone: +49 9082 707-0 info@lessmann.com
Fax: +49 9082 707-76 www.lessmann.com

Enquiry for Wheel and Interior Brushes

ENQUIRY FORMS

Drawing / description of application

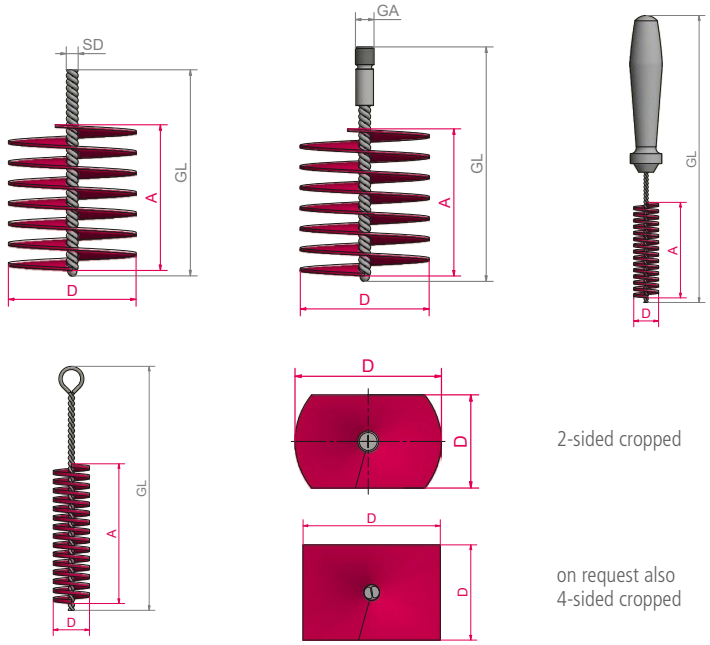

Sender: Company, contact person

Piece number _____

Brush Application ☐ dry ☐ wet

- ☐ derusting
- ☐ deburring
- ☐ cleaning
- ☐ others _____

Material to be treated ____°C Temperature

- ☐ steel
- ☐ aluminium
- ☐ stainless steel
- ☐ plastic
- ☐ others _____

Filling material

- ☐ steel
- ☐ brass coated steel
- ☐ brass
- ☐ stainless steel
- ☐ polyamide
- ☐ silicon carbide bristles (SIC)
- ☐ aluminium oxide bristles (AO)
- ☐ others _____

Diameter of filling material _____

Please indicate the dimensions according to the technical drawing (mm):

D Diameter _____ mm

SD core wire _____ mm

A working width _____ mm

GL overall length_____ mm

Commitment

- ☐ manually
- ☐ machine _____

Brush mount

- ☐ shank _____ mm
- ☐ thread _____

Inquiries and Infos:
Phone: +49 9082 707-0 info@lessmann.com
Fax: +49 9082 707-76 www.lessmann.com

General Conditions of Sale and Delivery

1. Scope
(1) Our general conditions of sale apply exclusively; we do not acknowledge any conditions of the customer which are contrary to or deviate from our general conditions of sale, unless we explicitly consented in writing to their validity.
(2) All agreements reached between us and the customer for the purpose of carrying out this contract must be made in writing. This applies also to offers and orders which were agreed with our sales representatives.
(3) Our general conditions of sale shall apply only to commercial businesses, not to private consumers.

2. Offer
(1) All prices contained in an offer are subject to alterations. The prices are valid as fixed prices for 6 months, only after acknowledgement of the order.
(2) We reserve rights of ownership and copyrights on diagrams, drawings, design worksheets and other documents; they must not be made accessible to third parties.

3. Prices – Terms of Payment
(1) All prices are in € (EURO), ex works Oettingen, exclusive costs of packaging.
(2) Our prices do not include Value-Added Tax.
(3) Unless stated otherwise in the acknowledgement of the order we grant 2% cash discount on payments in cash made within 10 days after the date of the invoice, payments shall be made within 30 days from the date of the invoice.
(4) In case of a delayed payment, we are entitled to demand interest at a rate of 4% p.a. above the actual basis rate of the EZB.

4. Period of Delivery – Despatch – Delivery on Demand
(1) Our liability in cases of delayed delivery is limited to cases of intent and gross negligence.
(2) In case of delayed delivery the customer has to set us an appropriate time limit for the delivery. If we have not delivered by that date the customer has the right to withdraw from the contract. Customer's rights to claim damages is limited to the extent of the foreseeable damage and to cases of intent and gross negligence. In other cases the right to claim damages is limited to the amount of the contract price.
(3) The limitations according to paragraphs (1) and (2), shall not apply in case a delivery at a fixed time has been agreed, or if the customer has lost its interest in the delivery due to the delay.
(4) We will keep our delivery obligations on condition that the customer will keep its obligations correctly and in time.
(5) Unless otherwise agreed we will take care of the most favourable way of transport at our own discretion on account and at the risk of customer. This shall also apply to carriage paid and FOB deliveries.
(6) If delivery on demand has been agreed we may buy the material necessary to produce the complete order and we may produce the complete quantity immediately.

5. Warranty for Defects – Liability
(1) The customer shall examine our deliveries immediately and report complaints about defects immediately. We can only be held responsible for defects if the customer has correctly fulfilled this obligation.
(2) In case of defects we will either remedy the defect or replace the product by a not defective one. In case we replace the product we will pay the additional expenses. We will bear transport costs for the transport not farer than to the place of performance. In case of delayed delivery the customer has the option of either withdrawing from the contract or demanding a reduction in the price. Customer has no further claims. Our liability is not limited in cases of intent, gross negligence, undertaking of a guarantee, violation of an obligation non compliance with which would endanger the purpose of the contract, for damages caused by injury to life, body or health and for claims based on the German product liability law (Produkthaftungsgesetz).
(3) Any and all claims against us are subject to a limitation period of 12 months from delivery. This does not apply as far as §§ 438 subpar. 1 No 2, 479 subpar. 1 and 634a subpar. 1 No 2 of the German Civil Code lays down a longer period or if we are liable due to intent or gross negligence.

6. Reservation of Ownership
(1) The customer shall obtain ownership of the delivered products only after we have received all payments from the business relationship with the customer.
(2) In the event of seizures or other actions by third parties, the customer shall inform us thereof immediately in writing. As far as the third party is not able to reimburse our total costs of legal action in accordance with paragraph 771 of the German Code of Civil Procedure, the customer shall reimburse us the loss.
(3) The customer is entitled to sell the products. The customer shall assign all rights and titles arising from the further sale to us regardless of wheth er the products have been processed or not. The customer remains entitled to collect the payments from the sales. We shall not collect any payments except the customer is behind with payments and/or has gone bankrupt and/or has stopped payments.
(4) Any processing, marking or other changes of the products by the customer shall be done on our behalf. If we have to take back the products, the customer shall give us the name and address of the customer who wished the products to be processed, marked or changed.
(5) We shall, at the request of customer, release our rights and titles up to the amount which exceeds 20% of the value of our payment claim to be protected. The selection of the rights and titles to be released shall be at our discretion.

7. Place of Jurisdiction – Place of Performance – Law
(1) Place of jurisdiction shall be the place of our office. We also may take proceedings against the customer at the place of its office.
(2) Our office is the place of performance, unless our
acknowledgement of the order stated something different.
(3) The laws of the Federal Republic of Germany shall apply. The United Nations Convention on Contracts for the International Sale of Goods (CISG) shall not apply.

8. Miscellaneous
(1) Special designs can not be taken back. Our deliveries may deviate from the agreed volume by +/- 15%.
(2) The minimum order value, as well as extra payments for small volume purchases, are fixed in the actual price list.
(3) Quantities deviating from the standard packet will be increased or decreased to the corresponding standard packet, otherwise extra payments per incomplete packet will be charged in accordance with the actual price list.

Minimum order value:
For stock articles (**bold printed** articles):
net € 100.00

For special production and *italic printed* articles:
net € 250.00 / article

Extra payment for incomplete packets:
net € 4.00

Delivery costs on request.
Express delivery on extra charge available.

We reserve the right to change the construction and design of the brushes in the course of further technical developments. Information to measurements are approximate and not binding. All measurements are in mm.

The LESSMANN free dimension tolerances apply. Request these if necessary.

Purchase Order Form

Supplier
Lessmann GmbH
Lucas-Schultes-Str. 2
D-86732 Oettingen

Buyer

.....

.....

.....

.....

Date .....

Customer Number .....

Contact Person .....

Phone .....

E-Mail .....

Order Number: .....

Article Number	Article Name	Quantity	Price	Discount	Date of Delivery

Shipping Address (if different from above):

.....

.....

.....

.....

Billing Address (if different from above):

.....

.....

.....

.....

☐ **Yes, please electronic order confirmation to be sent to: E-Mail** .....

☐ **Yes, please electronic invoice to be sent to: E-Mail** .....

For more information about our brush selection please visit our website www.lessmann.com/en/Products

We hereby accept the current „General Conditions of Sale and Delivery" of Lessmann GmbH as printed in the Lessmann catalogue on page 178 available to us.

Buyer's Signature / Stamp

Article Numbers

Art. No.	Page
000.041	43
000.042	43
000.043	43
000.044	43
000.045	43
000.051	150
000.071	127
000.072	127
000.311	101
000.321	101
000.323	101
000.331	101
000.501	137
000.503	137
000.507	137
000.631	43
000.641	43
000.651	43
000.661	43
000.671	43
000.886.63	43
000.886.64	43
000.886.65	43
000.886.68	43
000.888.32	43
001.211	127
001.212	127
001.215	127
001.222	127
001.225	127
037.101	101
037.200	101
037.201	101
037.201.CC	134
037.221	101
037.710	101
045.301	129
045.910	129
045.915	129
047.700	143
047.705	143
047.707	143
047.708	143
047.750	143
047.754	143
047.755	143
047.757	143
047.763	143
047.764	143
047.801	143
048.241	53
048.271	53
048.291	53
048.441	53
048.471	53
048.491	53
048.701	53
048.821	53
048.841	53
048.851	53
048.901	53
048.941	53
056.001	93
056.301	93
056.501	93
056.701	93
061.101	101
064.050	101
100.011	91
100.020	91
100.021	91
100.021.CC	134
100.030	91
100.031	91
100.031.CC	134
100.040	91
100.041	91
100.041.CC	134
100.050	91
100.051	91
100.051.CC	134
100.061	91
100.061.CC	134
102.431	91
102.441	91
102.611	91
102.621	91
102.631	91
102.641	91
102.651	91
102.661	91
103.711	91
103.721	91
103.731	91
103.741	91
103.751	91
103.761	91
104.321	91
104.331	91
104.341	91
104.421	91
104.431	91
104.441	91
104.451	91
104.611	91
104.621	91
104.631	91
104.631.CC	134
104.641	91
104.641.CC	134
104.651	91
104.661	91
105.421	91
105.431	91
105.441	91
105.451	91
105.461	91
105.731	91
105.741	91
106.621	91
106.631	91
106.641	91
106.651	91
107.321	91
107.331	91
107.341	91
107.351	91
107.411	91
107.421	91
107.431	91
107.441	91
107.451	91
107.461	91
107.611	91
107.621	91
107.631	91
107.631.CC	134
107.641	91
107.641.CC	134
107.651	91
107.661	91
108.041	68, 91
108.331	68, 91
108.341	68, 91
108.351	68, 91
109.431	91
109.441	91
109.451	91
109.741	91
120.401	93
120.401.CC	134
120.412	93
120.413	97
120.423	97
120.433	97
120.443	97
120.601	93
120.801	93
120.801.CC	134
120.811	93
120.811.CC	134
120.831	93
121.111	100
121.211	100
122.401	93
122.771	68, 93
122.801	93
122.821	68, 93
122.871	68, 93
124.101	105
124.121	105
124.181	68, 105
124.301	105
124.402	105
124.801	105
124.801.CC	134
124.841	105
125.111	94
125.201	94
125.211	94
125.211.CC	134
125.221	94
125.231	94
125.234	94
125.241	94
125.251	94
125.311	94
125.511	94
125.521	94
126.311	95
126.401	95
126.411	95
126.411.CC	134
126.431	95
126.441	95
126.451	95
126.451.CC	134
126.472	95
126.481	95
126.491	95
126.511	95
126.611	95
126.811	95
132.701	95
132.801	68, 94
135.455	97
136.101	93
136.102	93
136.103	93
137.701	95
138.469	97
138.704	95
138.705	95
140.201	99
140.641	99
140.811	99
140.901	99
141.231	99
141.421	99
142.101	101
142.211	101
144.001	100
144.001.CC	134
144.011	69, 100
144.021	100
144.111	69, 100
144.121	100
144.211	100
144.311	69, 100
144.411	69, 100
144.701	100
144.701.CC	134
146.101	103
146.201	103
146.270	68, 103
146.301	103
147.101	103
147.200	103
147.201	103
147.261	103
147.301	103
148.101	103
148.141	103
148.161	103
148.170	68, 103
148.601	103
151.108	107
151.109	107
151.511	107
151.991.07	107
151.992.07	107
151.995.07	107
152.510	107
152.811	69, 99
152.995.07	107
182.152	95
182.162	95
182.172	95
182.331	94
182.401	92
182.401.CC	134
182.411	92
182.421	92
182.421.CC	134
182.431	92
182.441	92
182.451	92
182.451.CC	134
182.472	95
182.807	95
182.811	95
183.704	95
183.706	95
184.101	129
184.104	129
184.412	129
185.121	92
185.131	92
185.141	92
185.151	92
185.421	92
185.431	92
185.441	92
185.451	92
185.621	92
185.631	92
185.641	92
185.651	92
185.811	93
186.431	92
200.C21.00	164
200.C53.00	164
200.C53.10	164
201.C23.00	164
201.C53.00	164
201.C53.10	164
202.821.00	164
202.823.00	164
202.825.00	164
202.853.00	164
202.853.10	164
203.821.00	164
203.823.00	164
203.825.00	164
203.853.00	164
203.853.10	164
204.823.00	164
204.826.00	164
204.827.00	164
204.853.00	164
204.853.10	164
206.123.00	164
206.126.00	164
206.127.00	164
206.153.00	164
206.153.10	164
207.A29.00	164
207.A2E.00	164
207.A2J.00	164
207.A53.00	164
207.A53.10	164
208.A29.00	164
208.A2E.00	164
208.A2J.00	164
208.A53.00	164
208.A53.10	164
20J.123.00	164
20J.126.00	164
20J.127.00	164
20J.153.00	164
20J.153.10	164
210.D21.00	164
210.D53.00	164
210.D53.10	164
211.D23.00	164
211.D53.00	164
211.D53.10	164
212.721.00	164
212.723.00	164
212.725.00	164
212.753.00	164
212.753.10	164
213.721.00	164
213.723.00	164
213.725.00	164
213.753.00	164
213.753.10	164
214.723.00	164
214.726.00	164
214.727.00	164
214.753.00	164
214.753.10	164
216.223.00	164
216.226.00	164
216.227.00	164
216.253.00	164
216.253.10	164
217.B29.00	164
217.B2E.00	164
217.B2J.00	164
217.B53.00	164
217.B53.10	164
218.B29.00	164
218.B2E.00	164
218.B2J.00	164
218.B53.00	164
218.B53.10	164
21J.223.00	164
21J.226.00	164
21J.227.00	164
21J.253.00	164
21J.253.10	164
220.323.00	160
220.326.00	160
220.329.00	160
220.32C.00	160
220.353.00	160
220.353.10	160
221.323.00	160
221.326.00	160
221.329.00	160
221.32C.00	160
221.353.00	160
221.353.10	160
222.323.00	160
222.326.00	160
222.329.00	160
222.32C.00	160
222.353.00	160
222.353.10	160
223.323.00	160
223.326.00	160
223.329.00	160
223.32C.00	160
223.353.00	160
223.353.10	160
224.323.00	160
224.326.00	160
224.329.00	160
224.32C.00	160
224.353.00	160
224.353.10	160
225.529.00	160
225.52E.00	160
225.52J.00	160
225.553.00	160
225.553.10	160
226.529.00	160
226.52E.00	160
226.52J.00	160
226.553.00	160
226.553.10	160
230.423.00	160
230.426.00	160
230.429.00	160
230.42C.00	160
230.453.00	160
230.453.10	160
231.423.00	160
231.426.00	160
231.429.00	160
231.42C.00	160
231.453.00	160
231.453.10	160
232.423.00	160
232.426.00	160
232.429.00	160
232.42C.00	160
232.453.00	160
232.453.10	160
233.423.00	160
233.426.00	160
233.429.00	160
233.42C.00	160
233.453.00	160
233.453.10	160
234.423.00	160
234.426.00	160
234.429.00	160
234.42C.00	160
234.453.00	160
234.453.10	160
235.629.00	160
235.62E.00	160
235.62J.00	160
235.653.00	160
235.653.10	160
236.629.00	160
236.62E.00	160
236.62J.00	160
236.653.00	160
236.653.10	160
240.323.00	162
240.326.00	162
240.329.00	162
240.32C.00	162
240.353.00	162
240.353.10	162
241.323.00	162
241.326.00	162
241.329.00	162
241.32C.00	162
241.353.00	162
241.353.10	162
242.323.00	162
242.326.00	162
242.329.00	162
242.32C.00	162
242.353.00	162
242.353.10	162
243.323.00	162
243.326.00	162
243.329.00	162
243.32C.00	162
243.353.00	162
243.353.10	162
244.323.00	162
244.326.00	162
244.329.00	162
244.32C.00	162
244.353.00	162
244.353.10	162
245.529.00	162
245.52E.00	162
245.52J.00	162
245.553.00	162
245.553.10	162
246.529.00	162
246.52E.00	162
246.52J.00	162
246.553.00	162
246.553.10	162
250.423.00	162
250.426.00	162
250.429.00	162
250.42C.00	162
250.453.00	162
250.453.10	162
251.423.00	162
251.426.00	162
251.429.00	162
251.42C.00	162
251.453.00	162
251.453.10	162
252.423.00	162
252.426.00	162
252.429.00	162
252.42C.00	162
252.453.00	162
252.453.10	162
253.423.00	162
253.426.00	162
253.429.00	162
253.42C.00	162
253.453.00	162
253.453.10	162
254.423.00	162
254.426.00	162
254.429.00	162
254.42C.00	162
254.453.00	162
254.453.10	162
255.629.00	162
255.62E.00	162
255.62J.00	162
255.653.00	162
255.653.10	162
256.629.00	162
256.62E.00	162
256.62J.00	162
256.653.00	162
256.653.10	162
260.123.00	166
260.126.00	166
260.127.00	166
260.153.00	166
260.153.10	166
261.C23.00	166
261.C53.00	166
261.C53.10	166
262.123.00	166
262.126.00	166
262.127.00	166
262.153.00	166
262.153.10	166
263.123.00	166
263.126.00	166
263.127.00	166
263.153.00	166
263.153.10	166
264.823.00	166
264.826.00	166
264.827.00	166
264.853.00	166
264.853.10	166
265.823.00	166
265.826.00	166
265.827.00	166
265.853.00	166
265.853.10	166
266.123.00	166
266.126.00	166
266.127.00	166
266.153.00	166
266.153.10	166
267.A29.00	166
267.A2E.00	166
267.A2J.00	166
267.A53.00	166
267.A53.10	166
268.A29.00	166
268.A2E.00	166
268.A2J.00	166
268.A53.00	166
268.A53.10	166
269.123.00	166
269.126.00	166
269.127.00	166
269.153.00	166
269.153.10	166
270.223.00	166
270.226.00	166
270.227.00	166
270.253.00	166
270.253.10	166
271.D23.00	166
271.D53.00	166
271.D53.10	166
272.223.00	166
272.226.00	166
272.227.00	166
272.253.00	166
272.253.10	166
273.223.00	166
273.226.00	166
273.227.00	166
273.253.00	166
273.253.10	166
274.723.00	166
274.726.00	166
274.727.00	166
274.753.00	166
274.753.10	166
275.723.00	166
275.726.00	166
275.727.00	166
275.753.00	166
275.753.10	166
276.223.00	166
276.226.00	166
276.227.00	166
276.253.00	166
276.253.10	166
277.B29.00	166
277.B2E.00	166
277.B2J.00	166
277.B53.00	166
277.B53.10	166
278.B29.00	166
278.B2E.00	166
278.B2J.00	166
278.B53.00	166
278.B53.10	166

Art. No. Page

279.223.00 166
279.226.00 166
279.227.00 166
279.253.00 166
279.253.10 166
300.091 39
300.742 39
300.771.KG 23
301.213.10 37
301.213.15 37
301.213.20 37
301.213.25 37
301.213.30 37
301.214.10 37
301.214.15 37
301.214.20 37
301.214.25 37
301.214.30 37
301.225.10 37
301.225.15 37
301.225.20 37
301.225.25 37
301.225.30 37
301.236.20 37
301.236.25 37
301.236.30 37
301.713.15 37
301.713.20 37
301.713.25 37
301.714.15 37
301.714.20 37
301.714.25 37
301.724.30 37
301.725.20 37
301.725.25 37
301.725.30 37
301.736.20 37
301.736.30 37
304.161.14 63
304.361.14 63
304.761.14 63
310.141 28
310.161 28
310.341 29
310.361 29
310.702.06 39
310.831 27
310.841 27
310.851 27
310.871 27
311.742.01 39
311.762 39
312.141 39
312.142 31
312.143 31
312.162 31
312.163 31
312.342 32
312.362 32
312.363 32
312.542 33
312.543 33
312.562 33
312.563 33
320.001 39
320.003 39
320.004 39
320.009 39
320.00K.17 39
320.01K.17 39
320.061 41
320.141 28
320.161 28, 39
320.161.13 39
320.16K.17 39
320.341 29
320.341.19 35
320.361 29
320.703.19 35
320.707 28
320.821 27
320.821.19 35
320.831 27
320.841 27
320.851 27
320.871 27
320.C31 27
320.C51 27
323.002 39
323.003 39
323.132 31
323.133 31
323.142 31
323.143 31
323.162 31
323.163 31
323.305.19 35
323.342 32
323.343 32
323.348.19 35
323.362 32
323.363 32
323.542 33
323.543 33
323.562 33
323.563 33
323.704.19 35
323.705.19 35
323.770.13 35
323.805.19 35
323.820.13 35
323.828.19 35
323.830.13 35
323.900.10 35
330.001 39
330.141 28
330.161 28
330.341 29
330.361 29
330.821 27
330.841 27
330.851 27
330.871 27
331.161 28
331.341 29
331.361 29
334.132 31
334.142 31
334.143 31
334.162 31
334.163 31
334.342 32
334.343 32
334.362 32
334.363 32
334.542 33
334.543 33
334.562 33
335.161.14 63
335.361.14 63
335.761.14 63
340.141 28
340.161 28
340.341 29
340.361 29
340.707 28
340.821 27
340.831 27
340.841 27
340.851 27
340.871 27
340.C31 27
340.C51 27
344.132 31
344.133 31
344.142 31
344.143 31
344.172 31
344.173 31
344.342 32
344.343 32
344.362 32
344.363 32
344.542 33
344.543 33
344.562 33
344.563 33
344.662 33
345.051 41
345.132 31
345.133 31
345.142 31
345.143 31
345.162 31
345.163 31
345.342 32
345.343 32
345.362 32
345.363 32
345.462.V4 32
345.542 33
345.543 33
345.562 33
345.563 33
345.662.MS 33, 69
345.762 31
345.822 32
345.823 32
345.852 32
345.853 32
350.141 28
350.161 28
350.341 29
350.361 29
350.821 27
350.831 27
350.841 27
350.851 27
350.871 27
351.141 28
351.161 28
351.341 29
351.361 29
351.707 28
351.771.KG 23
351.841 27
351.851 27
351.871 27
355.133 31
355.142 31
355.143 31
355.162 31
355.163 31
355.342 32
355.362 32
355.363 32
355.542 33
355.543 33
355.562 33
355.563 33
355.762 31
355.823 32
355.853 32
35E.136 41
35E.146 41
35E.336 41
35E.846 41
35E.847 41
35E.856 41
35E.857 41
35E.876 41
35E.877 41
360.141 28
360.161 28
360.341 29
360.361 29
360.707 28
360.831 27
360.841 27
360.851 27
360.871 27
360.C31 27
360.C51 27
361.141 28
361.161 28
361.341 29
361.361 29
361.821 27
361.831 27
361.841 27
361.851 27
361.871 27
362.141 28
362.161 28
362.272 28
362.341 29
362.361 29
362.707 28
362.831 27
362.841 27
362.851 27
362.852 27
362.871 27
365.132 31
365.133 31
365.142 31
365.143 31
365.172 31
365.173 31
365.342 32
365.343 32
365.362 32
365.363 32
365.462.V4 32
365.542 33
365.543 33
365.562 33
365.563 33
365.762 31
365.763 31
365.823 32
365.853 32
366.142 31
366.143 31
366.162 31
366.163 31
366.342 32
366.343 32
366.362 32
366.363 32
366.542 33
366.543 33
366.562 33
366.563 33
366.762 31
36E.146 41
36E.176 41
36E.846 41
36E.847 41
36E.856 41
36E.876 41
36E.877 41
370.141 28
370.161 28
370.241.KG 48
370.242.KG 48
370.271.KG 48
370.272 28
370.272.KG 48
370.341 29
370.361 29
370.441.KG 48
370.442.KG 48
370.471.KG 48
370.472.KG 48
370.831 27
370.841 27
370.851 27
370.852 27
370.871 27
370.C31 27
370.C51 27
371.141 28
371.161 28
371.341 29
371.361 29
371.841 27
371.851 27
371.871 27
372.831 27
372.841 27
372.851 27
372.871 27
376.142 31
376.162 31
376.163 31
376.342 32
376.343 32
376.362 32
376.363 32
376.542 33
376.543 33
376.562 33
377.043 47
377.043.00 47
377.043.T1 47
377.043.TA 47
377.044 48
377.044.00 48
377.044.26 48
377.044.27 48
377.044.T1 48
377.044.TA 48
377.045 47
377.047 48
377.048 47
377.048.00 47
377.049 48
377.051 47
377.051.00 47
377.051.26 47
377.051.27 47
377.051.T1 47
377.051.TA 47
377.052 47
377.053 47
377.053.00 47
377.053.26 47
377.053.27 47
377.053.T1 47
377.053.TA 47
377.054 47
377.054.00 47
377.054.26 47
377.054.27 47
377.054.T1 47
377.054.TA 47
377.059 47
377.063 47
377.063.00 47
377.063.T1 47
377.063.TA 47
377.066 47
377.077 47
377.089 48
377.089.00 48
377.089.26 48
377.089.27 48
377.089.T1 48
377.089.TA 48
377.090 48
377.091 49
377.091.00 49
377.093 48
377.094 48
377.094.00 48
377.094.26 48
377.094.27 48
377.094.T1 48
377.094.TA 48
377.095 47
377.096 47
377.097 48
377.099 48
377.142 31
377.143 31
377.144 31
377.162 31
377.163 31
377.164 31
377.240.30 51
377.240.46 51
377.240.60 51
377.270.30 51
377.270.46 51
377.270.60 51
377.290.30 51
377.290.46 51
377.290.60 51
377.342 32
377.343 32
377.362 32
377.363 32
377.440.30 51
377.440.46 51
377.440.60 51
377.470.30 51
377.470.46 51
377.470.60 51
377.490.30 51
377.490.46 51
377.490.60 51
377.562 33
377.707 48
377.707.00 48
377.707.26 48
377.707.27 48
377.707.T1 48
377.707.TA 48
377.762 31
377.780.30 51
377.780.46 51
377.780.60 51
377.824 49
377.824.00 49
377.824.T1 49
377.824.TA 49
377.830.30 51
377.830.46 51
377.830.60 51
377.835 49
377.835.00 49
377.835.T1 49
377.835.TA 49
377.837 49
377.839 49
377.854 49
377.854.00 49
377.854.T1 49
377.854.TA 49
377.875 49
377.875.00 49
377.875.T1 49
377.875.TA 49
37E.137 41
37E.146 41
37E.147 41
37E.336 41
380.141 28
380.161 28
380.341 29
380.361 29
380.841 27
380.851 27
380.871 27
381.161 28
381.361 29
381.831 27
381.841 27
381.851 27
381.871 27
387.051 47
387.053 47
387.054 47
387.055 47
387.142 31
387.143 31
387.162 31
387.163 31
387.240.46 51
387.270.46 51
387.290.46 51
387.342 32
387.343 32
387.362 32
387.363 32
387.440.46 51
387.470.46 51
387.490.46 51
387.562 33
387.780.46 51
387.824 49
387.830.46 51
388.172 31
388.173 31
388.240.46 51
388.240.60 51
388.270.45 51
388.270.46 51
388.270.60 51
388.290.46 51
388.290.60 51
388.440.46 51
388.440.60 51
388.470.46 51
388.470.60 51
388.490.46 51
388.490.60 51
388.780.46 51
388.780.60 51
388.830.46 51
388.830.60 51
38T.841 27
38T.851 27
397.142 31
397.143 31
397.172 31
397.173 31
397.362 32
397.562 33
3KG.214.20 37
3KG.215.20 37
402.780 35
402.880 35
402.880.CC 135
402.881 35
402.882 35
402.883 35
402.890 35
402.891 35
402.892 35
402.893 35
405.006 150
405.835 150
405.843 35, 150
405.844 35, 150
405.845 35, 150
405.845.CC 135
405.854 150
405.864 150
405.905 150
405.908 150
408.812.DB 41
408.819.DB 41
408.822.DB 41
408.829.DB 41
408.839.DB 41
410.001.SB 87
410.001.WB 87
410.001.ZH 87
410.002.SB 87
410.002.WB 87
410.002.ZH 87
410.003.SB 87
410.003.WB 87
410.003.ZH 87
410.031 87
410.032 87
410.033 87
410.122 132
410.123 132
410.123.07 137
410.123.09 136
410.132 132
410.132.CC 135
410.133 132
410.133.07 137
410.133.09 136
410.134 132
410.135 132
410.135.09 136
410.136 132
410.136.07 137
410.136.09 136
410.138 132
410.138.07 137
410.138.09 136
410.152 132
410.152.09 136
410.153 132
410.153.07 137
410.153.09 136
410.153.CC 135
410.154 132
410.155 132
410.156 132
410.158 132
410.158.07 137
410.158.09 136
410.159 132
410.173 132
410.183 132
410.185 132
410.221 87
410.222 87
410.223 87
410.321 87
410.322 87
410.323 87
410.521 87
410.522 87
410.523 87
410.801 87
410.802 87
410.803 87
410.811.DB 87
410.812.DB 87
410.813.DB 87
410.871 87
410.871.A0 87
410.872 87
410.872.A0 87
410.873 87

Art. No. Page

410.873.A0 ... 87
410.881 ... 87
410.882 ... 87
410.883 ... 87
410.891 ... 87
410.891.A0 ... 87
410.892 ... 87
410.892.A0 ... 87
410.893 ... 87
410.893.A0 ... 87
411.132 ... 74
411.142 ... 74
411.342 ... 75
411.542 ... 77
412.731 ... 76
413.132 ... 74
413.133 ... 74
413.142 ... 74
413.143 ... 74
413.162 ... 74
413.163 ... 74
413.342 ... 75
413.343 ... 75
413.362 ... 75
413.363 ... 75
413.542 ... 77
413.543 ... 77
413.841 ... 77
413.871 ... 77
414.132 ... 74
414.133 ... 74
414.142 ... 74
414.143 ... 74
414.162 ... 74
414.163 ... 74
414.192 ... 74
414.193 ... 74
414.342 ... 75
414.343 ... 75
414.362 ... 75
414.462 ... 75
414.542 ... 77
414.543 ... 77
414.752 ... 76
414.842 ... 77
414.872 ... 77
415.132 ... 74
415.133 ... 74
415.142 ... 74
415.143 ... 74
415.160 ... 73
415.162 ... 74
415.163 ... 74
415.192 ... 74
415.193 ... 74
415.301 ... 75
415.302 ... 75
415.312 ... 75
415.342 ... 75
415.343 ... 75
415.362 ... 75
415.363 ... 75
415.442 ... 75
415.462 ... 75
415.542 ... 77
415.543 ... 77
415.741 ... 76
415.752 ... 76
415.753 ... 76
415.842 ... 77
415.852 ... 77
415.872 ... 77
415.C42 ... 77
415.C72 ... 77
416.132 ... 74
416.133 ... 74
416.142 ... 74
416.143 ... 74
416.160 ... 73
416.162 ... 74
416.163 ... 74
416.193 ... 74
416.302 ... 75
416.303 ... 75
416.312 ... 75
416.342 ... 75
416.343 ... 75
416.362 ... 75
416.363 ... 75
416.462 ... 75
416.542 ... 77
416.543 ... 77
416.562 ... 77
416.752 ... 76
416.842 ... 77
416.852 ... 77
416.872 ... 77
417.132 ... 74
417.133 ... 74
417.142 ... 74
417.143 ... 74
417.160 ... 73
417.162 ... 74
417.163 ... 74
417.168 ... 73
417.178.11 ... 73
417.193 ... 74
417.198 ... 73
417.198.07 ... 137
417.198.09 ... 136
417.198.11 ... 73
417.199 ... 73
417.306 ... 75
417.309 ... 75
417.312 ... 75
417.342 ... 75
417.343 ... 75
417.362 ... 75
417.363 ... 75
417.398 ... 73
417.399 ... 73
417.462 ... 75
417.542 ... 77
417.543 ... 77
417.562 ... 77
417.563 ... 77
417.752 ... 76
417.753 ... 76
417.842 ... 77
417.852 ... 77
417.872 ... 77
417.C42 ... 77
417.C72 ... 77
418.142 ... 74
418.143 ... 74
418.162 ... 74
418.163 ... 74
418.192 ... 74
418.312 ... 75
418.342 ... 75
418.343 ... 75
418.362 ... 75
418.363 ... 75
418.462 ... 75
418.542 ... 77
418.543 ... 77
418.704 ... 35, 76
418.752 ... 76
418.826 ... 35, 76
418.842 ... 77
418.852 ... 77
418.872 ... 77
41Z.143 ... 74
41Z.144 ... 74
41Z.163 ... 74
41Z.164 ... 74
41Z.343 ... 75
41Z.344 ... 75
41Z.363 ... 75
41Z.364 ... 75
421.147 ... 60
421.164 ... 60
421.164.09 ... 136
421.167 ... 60
421.167.09 ... 136
421.167.CC ... 135
421.197 ... 60
421.364 ... 60
421.367 ... 60
421.367.09 ... 136
421.367.CC ... 135
421.467 ... 60
421.564 ... 60
421.567 ... 60
421.767 ... 60
421.827 ... 60
421.857 ... 60
422.177 ... 63
422.177.09 ... 136
422.367 ... 63
422.767 ... 63
423.167 ... 60
423.167.09 ... 136
423.168 ... 60
423.16X ... 67
423.17X ... 67
423.367 ... 60
423.368 ... 60
423.36X ... 67
423.37X ... 67
424.147 ... 60
424.171 ... 60
424.177 ... 60
424.178 ... 60
424.197 ... 60
424.198 ... 60
424.361 ... 60
424.367 ... 60
424.368 ... 60
424.567 ... 60
425.000.01 ... 65
425.001.01 ... 65
425.010.01 ... 65
425.011.01 ... 65
425.290 ... 65
425.291 ... 65
426.000.01 ... 65
426.001.01 ... 65
426.010.01 ... 65
426.011.01 ... 65
426.147 ... 60
426.171 ... 60
426.177 ... 60
426.178 ... 60
426.197 ... 60
426.198 ... 60
426.290 ... 65
426.291 ... 65
426.361 ... 60
426.367 ... 60
426.368 ... 60
426.567 ... 60
426.568 ... 60
426.701 ... 60
426.767 ... 60
427.147 ... 60
427.171 ... 60
427.177 ... 60
427.178 ... 60
427.297 ... 60
427.298 ... 60
427.367 ... 60
427.567 ... 60
429.171 ... 60
429.177 ... 60
429.178 ... 60
429.197 ... 60
429.198 ... 60
429.367 ... 60
430.001.SB ... 87
430.001.WB ... 87
430.001.ZH ... 87
430.002.SB ... 87
430.002.WB ... 87
430.002.ZH ... 87
430.031 ... 87
430.032 ... 87
430.122 ... 133
430.122.09 ... 136
430.123 ... 133
430.123.07 ... 137
430.123.09 ... 136
430.123.CC ... 135
430.124 ... 133
430.125 ... 133
430.126 ... 133
430.126.07 ... 137
430.126.09 ... 136
430.128 ... 79, 133
430.128.07 ... 137
430.128.09 ... 136
430.129 ... 79, 133
430.132 ... 133
430.133 ... 133
430.133.07 ... 137
430.133.09 ... 136
430.133.CC ... 135
430.134 ... 133
430.135 ... 133
430.136 ... 133
430.138 ... 79, 133
430.138.07 ... 137
430.138.09 ... 136
430.139 ... 79, 133
430.222 ... 87
430.223 ... 87
430.322 ... 87
430.323 ... 87
430.522 ... 87
430.523 ... 87
430.802 ... 87
430.803 ... 87
430.812.DB ... 87
430.813.DB ... 87
430.872 ... 87
430.872.A0 ... 87
430.873 ... 87
430.873.A0 ... 87
430.882 ... 87
430.883 ... 87
430.892 ... 87
430.892.A0 ... 87
430.893 ... 87
430.893.A0 ... 87
434.142 ... 79
434.162 ... 79
434.342 ... 79
434.345 ... 79
434.355 ... 79
434.362 ... 79
434.365 ... 79
434.542 ... 79
435.142 ... 79
435.162 ... 79
435.342 ... 79
435.345 ... 79
435.355 ... 79
435.362 ... 79
435.365 ... 79
435.542 ... 79
435.562 ... 79
436.162 ... 79
436.362 ... 79
437.142 ... 79
437.162 ... 79
437.342 ... 79
437.362 ... 79
437.542 ... 79
446.271 ... 61
446.277 ... 61
446.701 ... 61
446.771 ... 61
446.777 ... 61
446.827 ... 61
446.851 ... 61
446.857 ... 61
447.277 ... 61
447.707 ... 61
447.827 ... 61
447.857 ... 61
450.001.SB ... 87
450.001.WB ... 87
450.001.ZH ... 87
450.031 ... 87
450.221 ... 87
450.311 ... 87
450.521 ... 87
450.801 ... 87
450.821.DB ... 87
450.871 ... 87
450.871.A0 ... 87
450.881 ... 87
450.891 ... 87
450.891.A0 ... 87
451.131 ... 82
451.141 ... 82
451.160 ... 81
451.161 ... 82
451.162 ... 82
451.191 ... 82
451.192 ... 82
451.258 ... 85
451.261.BD ... 82
451.278 ... 85
451.305 ... 83
451.341 ... 83
451.361 ... 83
451.362 ... 83
451.458 ... 85
451.461 ... 83
451.478 ... 85
451.541 ... 83
451.542 ... 83
451.561 ... 83
451.562 ... 83
451.831 ... 81
451.851 ... 81
451.871 ... 81
452.131 ... 82
452.141 ... 82
452.160 ... 81
452.161 ... 82
452.191 ... 82
452.261.BD ... 82
452.278.GH ... 85
452.304 ... 83
452.341 ... 83
452.361 ... 83
452.541 ... 83
452.561 ... 83
452.703 ... 82
452.705 ... 82
452.751 ... 82
452.831 ... 81
452.851 ... 81
453.131 ... 82
453.141 ... 82
453.160 ... 81
453.161 ... 82
453.163 ... 82
453.191 ... 82
453.238 ... 85
453.258 ... 85
453.261.BD ... 82
453.278 ... 85
453.278.09 ... 136
453.298 ... 85
453.301 ... 83
453.338 ... 85
453.341 ... 83
453.358 ... 85
453.361 ... 83
453.363 ... 83
453.378 ... 85
453.398 ... 85
453.541 ... 83
453.561 ... 83
453.703 ... 82
453.705 ... 82
453.751 ... 82
453.758 ... 85
453.778 ... 85
454.238 ... 85
454.258 ... 85
454.278 ... 85
454.298 ... 85
454.338 ... 85
454.358 ... 85
454.378 ... 85
454.378.09 ... 136
454.398 ... 85
454.758 ... 85
454.778 ... 85
454.831 ... 81
454.851 ... 81
454.871 ... 81
456.131 ... 82
456.141 ... 82
456.160 ... 81
456.161 ... 82
456.163 ... 82
456.191 ... 82
456.238 ... 85
456.258 ... 85
456.261.BD ... 82
456.278 ... 85
456.298 ... 85
456.338 ... 85
456.341 ... 83
456.358 ... 85
456.361 ... 83
456.378 ... 85
456.398 ... 85
456.541 ... 83
456.561 ... 83
456.703 ... 82
456.705 ... 82
456.751 ... 82
456.758 ... 85
456.778 ... 85
456.831 ... 81
456.851 ... 81
456.871 ... 81
458.131 ... 82
458.141 ... 82
458.161 ... 82
458.191 ... 82
458.341 ... 83
458.361 ... 83
458.541 ... 83
458.561 ... 83
460.121 ... 81
460.122 ... 81
466.171 ... 81
466.172 ... 81
469.131 ... 81
469.133 ... 81
469.151 ... 81
469.153 ... 81
469.362 ... 81
470.111 ... 17
470.211 ... 17
471.117 ... 17
471.12K ... 18
471.13K ... 18
471.14K ... 18
471.157 ... 63
471.157.SM ... 63
471.207.28 ... 21
471.208.28 ... 21
471.217 ... 17
471.22K ... 18
471.23K ... 18
471.24K ... 18
471.254 ... 63
471.257 ... 63
471.257.09 ... 136
471.257.CC ... 135
471.72K ... 18
471.73K ... 18
471.74K ... 18
471.757 ... 63
471.807.28 ... 22
471.808.28 ... 22
471.817 ... 17
471.82K ... 18
471.83K ... 18
471.84K ... 18
471.857 ... 63
472.111 ... 17
472.117 ... 17
472.12K ... 18
472.13K ... 18
472.14K ... 18
472.157 ... 63
472.201.32 ... 21
472.201.39 ... 21
472.201.EZ ... 21
472.207.32 ... 21
472.208.32 ... 21
472.20X.32 ... 67
472.211 ... 17
472.211.09 ... 136
472.211.CC ... 135
472.211.SM ... 17
472.211.WZ ... 17
472.217 ... 17
472.217.09 ... 136
472.21X ... 67
472.22K ... 18
472.23K ... 18
472.24K ... 18
472.257 ... 63
472.257.09 ... 136
472.257.SM ... 63
472.257.V4 ... 63
472.257.WZ ... 63
472.25X ... 67
472.711 ... 17
472.717 ... 17
472.72K ... 18
472.73K ... 18
472.74K ... 18
472.757 ... 63
472.801.32 ... 22
472.801.39 ... 22
472.801.EZ ... 22
472.807.32 ... 22
472.808.32 ... 22
472.80X.32 ... 67
472.811 ... 17
472.811.09 ... 136
472.811.WZ ... 17
472.817 ... 17
472.81X ... 67
472.82K ... 18
472.83K ... 18
472.84K ... 18
472.857 ... 63
472.857.09 ... 136
472.857.WZ ... 63
472.85X ... 67
473.111 ... 17
473.117 ... 17
473.12K ... 18
473.13K ... 18
473.14K ... 18
473.201.40 ... 21
473.201.EZ ... 21
473.207.40 ... 21
473.208.40 ... 21
473.20X.40 ... 67
473.211 ... 17
473.211.24 ... 17
473.211.SM ... 17
473.211.WZ ... 17
473.217 ... 17
473.217.WZ ... 17
473.21X ... 67
473.22K ... 18
473.23K ... 18
473.24K ... 18
473.257 ... 63
473.711 ... 17
473.72K ... 18
473.73K ... 18
473.74K ... 18
473.801.40 ... 22
473.801.EZ ... 22
473.807.40 ... 22
473.808.40 ... 22
473.80X.40 ... 67
473.811 ... 17
473.811.WZ ... 17
473.817 ... 17
473.81X ... 67
473.82K ... 18
473.83K ... 18
473.84K ... 18
473.857 ... 63
474.111 ... 17
474.117 ... 17
474.12K ... 18
474.13K ... 18
474.14K ... 18
474.201.48 ... 21
474.207.48 ... 21
474.208.48 ... 21
474.211 ... 17
474.217 ... 17
474.22K ... 18
474.23K ... 18
474.24K ... 18
474.311 ... 17
474.317 ... 17
474.72K ... 18
474.73K ... 18
474.74K ... 18
474.801.48 ... 22
474.807.48 ... 22
474.808.48 ... 22
474.811 ... 17
474.817 ... 17
474.82K ... 18
474.83K ... 18
474.84K ... 18
475.111 ... 17
475.117 ... 17
475.12K ... 18
475.13K ... 18
475.14K ... 18
475.201.48 ... 21
475.201.56 ... 21

Art. No. Page

475.201.76 21
475.201.EZ 21
475.207.48 21
475.207.56 21
475.207.76 21
475.208.48 21
475.208.56 21
475.208.76 21
475.211 17
475.217 17
475.22K 18
475.23K 18
475.24K 18
475.260.01 65
475.261.01 65
475.2B1.76 23
475.2M0.01 65
475.2M1.01 65
475.2W1.76 23
475.311 17
475.317 17
475.5M0.01 65
475.5M1.01 65
475.72K 18
475.73K 18
475.74K 18
475.801.48 22
475.801.56 22
475.801.76 22
475.807.48 22
475.807.56 22
475.807.76 22
475.808.48 22
475.808.56 22
475.808.76 22
475.811 17
475.817 17
475.82K 18
475.83K 18
475.84K 18
476.111 17
476.12K 18
476.13K 18
476.14K 18
476.210.51 17
476.211 17
476.22K 18
476.23K 18
476.24K 18
476.260.01 65
476.261.01 65
476.2M0.01 65
476.2M1.01 65
476.311 17
476.5M0.01 65
476.5M1.01 65
476.72K 18
476.73K 18
476.74K 18
476.82K 18
476.83K 18
476.84K 18
477.12K 18
477.13K 18
477.14K 18
477.210.75 17
477.22K 18
477.23K 18
477.24K 18
477.260.01 65
477.261.01 65
477.310.75 17
477.72K 18
477.73K 18
477.74K 18
477.82K 18
477.83K 18
477.84K 18
478.12K 18
478.13K 18
478.14K 18
478.200.06 19
478.200.08 19
478.200.10 19
478.210.75 17
478.225.06 19
478.225.08 19
478.225.10 19
478.22K 18
478.23K 18
478.24K 18
478.260.01 65
478.261.01 65
478.300.06 19
478.300.08 19
478.300.10 19
478.310.75 17
478.325.06 19
478.325.08 19
478.325.10 19
478.500.06 19
478.500.08 19
478.500.10 19
478.520.06 19
478.520.08 19
478.72K 18
478.73K 18
478.74K 18
478.82K 18
478.83K 18
478.84K 18
47S.201.76 21
47S.211 17
480.117 57
480.217 57
480.717 59
482.017 59
482.027 59
482.057 59
482.114 57
482.117 57
482.117.09 136
482.117.SM 57
482.204 57
482.207 57
482.208 57
482.214 57
482.214.09 136
482.217 57
482.217.09 136
482.217.CC 135
482.217.SM 57
482.217.WZ 57
482.317 57
482.517 59
482.714 59
482.717 59
482.807 59
482.808 59
482.814 59
482.817 59
482.817.09 136
482.817.WZ 59
483.117 57
483.217 57
483.21X 67
483.230 79
483.317 57
483.817 59
483.81X 67
484.117 58
484.118 58
484.217 58
484.218 58
484.311 58
484.317 58
484.318 58
484.717 59
484.718 59
484.817 59
484.818 59
485.137 57
485.237 57
485.237.CC 135
485.237.SM 57
485.337 57
486.111 58
486.117 58
486.118 58
486.148 57
486.211 58
486.217 58
486.218 58
486.237 57
486.248 57
486.311 58
486.317 58
486.318 58
486.348 57
486.717 59
486.718 59
486.817 59
486.818 59
487.011.MS 58, 69
487.117 58
487.118 58
487.217 58
487.218 58
487.237 57
487.248 57
487.311 58
487.317 58
487.318 58
487.817 59
488.237 57
488.238 57
488.248 57
499.900 185
499.901 185
4K7.161 79
4K7.361 79
4K9.161 79
4K9.361 79
500.010 119
500.016 119
500.308 119
500.310 119
500.312 119
500.313 119
500.314 119
500.315 119
500.316 119
500.318 119
500.319 119
500.320 119
500.508 119
500.510 119
500.512 119
500.513 119
500.514 119
500.515 119
500.516 119
500.518 119
500.519 119
500.520 119
500.708 119
500.710 119
500.712 119
500.713 119
500.714 119
500.715 119
500.716 119
500.718 119
500.719 119
500.720 119
500.808 119
500.810 119
500.812 119
500.813 119
500.814 119
500.815 119
500.816 119
500.818 119
500.819 119
500.820 119
501.301 119
501.501 119
501.701 119
501.801 119
502.050.24 119
502.052.24 119
502.055.24 119
502.058.24 119
502.120.03 137
502.120.24 120
502.122.24 120
502.125.24 120
502.128.24 120
502.420.24 120
502.422.24 120
502.425.24 120
502.428.24 120
502.720.24 120
502.722.24 120
502.725.24 120
502.728.24 120
502.820.24 120
502.822.24 120
502.825.24 120
502.828.24 120
503.311 116
503.313 116
503.314 116
503.316 116
503.318 116
504.301 117
504.302 117
504.333 117
504.334 117
504.335 117
504.346 117
504.347 117
504.501.06 117
504.502.06 117
504.532.06 117
504.533.06 117
504.534.06 117
504.535.06 117
504.536.06 117
504.546.06 117
504.547.06 117
504.548.06 117
504.549.06 117
504.550.06 117
504.551.06 117
504.552.06 117
506.101 120
506.101.03 137
506.101.60 121
506.106 120
506.130 120
506.130.03 137
506.130.60 121
506.132 120
506.135 120
506.135.03 137
506.138 120
506.140 120
506.140.03 137
506.140.60 121
506.144 120
506.150 120
506.150.03 137
506.150.60 121
506.157 120
506.160.60 121
506.163 120
506.163.03 137
506.169 120
506.175 120
506.175.03 137
506.180.60 121
506.182 120
506.188 120
506.194 120
506.211 120
506.220 120
506.330 125
506.340 125
506.363 125
506.401 120
506.406 120
506.411 120
506.430 120
506.432 120
506.435 120
506.438 120
506.440 120
506.444 120
506.450 120
506.457 120
506.463 120
506.469 120
506.475 120
506.482 120
506.488 120
506.494 120
506.701 120
506.706 120
506.711 120
506.720 120
506.730 120
506.732 120
506.735 120
506.738 120
506.740 120
506.744 120
506.750 120
506.757 120
506.763 120
506.769 120
506.775 120
506.782 120
506.788 120
506.794 120
506.801 120
506.805.60 121
506.806 120
506.811 120
506.820 120
506.830 120
506.832 120
506.835 120
506.838 120, 125
506.840 120
506.844 120
506.850 120
506.855 125
506.857 120
506.860 125
506.863 120
506.869 120
506.875 120
506.882 120
506.888 120
506.894 120
507.001 123
507.002 123
507.003 123
507.004 123
507.005 123
507.006 123
507.007 123
507.105 121
507.190 121
507.301 126
507.302 126
507.303 126
507.304 126
507.305 126
507.307 126
507.308 126
507.959 126
522.120.24 120
522.122.24 120
522.125.24 120
522.128.24 120
526.101 120
526.106 120
526.111 120
526.130 120
526.132 120
526.135 120
526.138 120
526.140 120
526.144 120
526.150 120
526.157 120
526.163 120
526.169 120
526.175 120
526.182 120
526.188 120
526.194 120
529.301.24 123
529.302 123
529.311 123, 125
529.311.60 123
529.811 123, 125
532.202 123
532.202.03 137
532.203 123
532.203.03 137
532.205 123
532.211 123
532.214.60 121
532.218 123
532.218.60 121
532.303.60 121
532.703 125
532.716 125
532.718 125
533.008.24 123, 125
533.009.24 125
533.010.24 123, 125
533.405 121
533.408 121
540.067 111
540.068 111
540.069 111
540.070 111
540.071 111
540.072 111
540.073 111
540.074 111
540.075 111
540.076 111
540.077 111
540.078 111
540.225 121
540.321 121
540.323 121
540.324 121
540.325 121
540.327 121
541.037 111
541.039 111
541.045 111
541.076 111
541.077 111
541.079 111
541.083 111
541.084 111
541.085 111
541.087 111
541.089 111
541.093 111
541.095 111
541.200.42 112
541.200.55 112
541.200.60 112
541.200.80 112
541.201.00 112
541.201.30 112
541.201.60 112
541.201.90 112
541.202.00 112
541.202.20 112
541.202.50 112
541.202.80 112
541.203.00 112
541.203.20 112
541.203.80 112
541.2C1.00 111
541.2C1.30 111
541.2C1.60 111
541.2C2.00 111
541.2C2.50 111
541.301 133
541.301.07 137
541.301.09 136
541.301.CC 135
541.372 121
541.373 121
542.034 69, 114
542.301 115
542.302 115
542.303 115
542.304 115
542.305 115
542.306 115
542.307 115
542.308 115
542.309 115
542.311 115
542.313 115
542.315 115
542.317 115
542.319 115
542.320 115
542.347 115
542.351 115
542.381 115
542.501 115
542.502 115
542.503 115
542.504 115
542.505 115
542.506 115
542.507 115
542.508 115
542.511 115
542.513 115
542.515 115
542.519 115
542.520 115
542.538 115
542.541 115
542.542 115
542.547 115
542.701 115
542.702 115
542.703 115
542.704 115
542.705 115
542.706 115
542.707 115
542.708 115
542.709 115
542.711 115
542.713 115
542.715 115
542.717 115
542.719 115
542.720 115
542.739 115
542.740 115
542.741 115
542.801 115
542.802 115
542.803 115
542.804 115
542.807 115
542.808 115
542.811 115
542.812 115
542.813 115
542.815 115
542.818 115
542.819 115
542.820 115
542.822 115
542.823 115
542.881 115
543.006 69, 114
543.200.22 112
543.200.26 112
543.200.32 112
543.200.42 112
543.200.55 112
543.200.60 112
543.200.80 112
543.201.00 112
543.201.30 112
543.201.60 112
543.201.90 112
543.202.00 112
543.202.20 112
543.202.50 112
543.202.80 112
543.203.00 112
543.203.20 112
543.2C1.00 111
543.2C1.30 111
543.2C1.60 111
543.2C2.00 111
543.2C2.50 111
543.926 69, 114
544.301 124
544.302 124
544.307 125
544.361 125
544.804 124
545.200.12 112
545.200.19 112
545.200.22 112
545.200.26 112
545.200.32 112
545.200.42 112
545.200.55 112
545.200.60 112
545.200.80 112
545.201.00 112
545.201.30 112
545.201.60 112
545.201.90 112
545.202.20 112
545.202.50 112
545.202.80 112
545.203.00 112
545.203.20 112
545.303 125
545.307 124

Art. No.	Page
545.311	124
545.312	124
545.320	124
545.321	124
545.322	124
545.331	125
545.338	124
546.302	126
546.306	126
546.314	126
546.318	126
546.906	126
547.303	115
547.307	115
547.311	115
547.313	115
547.315	115
547.703	115
547.707	115
547.711	115
547.713	115
547.715	115
547.803	115
547.807	115
547.811	115
547.813	115
547.815	115
548.304.KG	113
548.305.KG	113
549.101	121
549.102	121
549.103	121
549.104	121
549.105	121
549.106	121
549.107	121
549.108	121
551.801	124
551.811	125
551.812	125
552.403	124
552.404	124
552.811	125
552.816	125
553.711	124
554.903	124
559.713	125
559.802	114
559.803	114
559.804	114
559.805	114
559.806	114
559.807	114
559.810	114
559.831	125
560.310	116
560.315	116
560.320	116
560.325	116
560.330	116
560.510	116
560.515	116
560.520	116
560.525	116
560.530	116
560.710	116
560.715	116
560.720	116
560.725	116
560.730	116
561.304	116
562.508	128
562.510	128
562.512	128
562.515	128
562.518	128
562.522	128
562.528	128
562.535	128
563.301	129
564.101	124
564.220.60	113
564.220.80	113
564.301	124
565.061.00	113
565.061.30	113
565.061.60	113
565.062.00	113
565.062.50	113
565.321.00	113
565.321.30	113
565.321.60	113
565.321.90	113
565.322.10	113
565.322.40	113
565.322.50	113
565.322.90	113
565.323.20	113
565.341.00	113
565.341.30	113
565.341.60	113
565.341.90	113
565.342.00	113
565.342.10	113
565.342.50	113
565.342.90	113
565.343.20	113
565.521.00	113
565.521.30	113
565.521.60	113
565.521.90	113
565.522.50	113
565.541.60	113
565.541.90	113
565.542.00	113
565.542.50	113
565.542.90	113
565.543.20	113
565.730.80	113
565.731.00	113
565.731.30	113
565.731.60	113
565.742.00	113
565.742.50	113
566.601	127
566.602	127
566.603	127
566.701	127
566.702	127
566.703	127
566.707.01	127
567.201	127
567.601	127
567.671	125, 127
567.701	127
567.731	127
567.771	125, 127
568.802	127
568.805	127
568.806	127
570.907	129
570.910	129
599.001	127
599.002	127
599.921	125
599.931	125
599.962	125
599.991	125
601.204.20	146
601.204.30	146
601.304.20	146
601.304.30	146
601.404.20	146
602.214.20	146
602.214.30	146
602.314.20	146
602.314.30	146
602.414.20	146
603.214.20	146
603.214.30	146
603.314.20	146
603.314.30	146
603.414.20	146
604.225.20	146
604.225.30	146
604.325.20	146
604.325.30	146
604.425.20	146
605.265.20	146
605.265.30	146
605.365.20	146
605.365.30	146
605.465.20	146
99BKHDEU	139, 185
99BKHENG	139, 185
99EGBDEU	185
99INBDEU	185
99STBDEU	185
99TBDEUENG	185

Keyword Index

Term	Page
Accessories for Wheel Brushes	42–43
Adapter Sets	42–43
Adapter Threads	127
Band Saw Brushes	38–39
Barbecue grill brushes	96–97
Battery Terminal Brushes	129
Bevel Brushes	62–63
Blister Packaging	136
Body Brushes	76
Boiler Brushes	122–125
Boiler Brushes-Sets	125
Bore Hole Cleaning Brushes	117
Brake Caliper Brushes ROKI®	92
Bricklayer's Brushes	101
Brooms	102–103
Brushes for grass trimmers	64–65
Brushes for removing wet storage stain	98–99
Brushes for wood working	34–35
Brushes low sparking	68–69
Brushes with carbon fibre	142–143
Chimney Brushes	123
Cup and Bevel Brushes	**55–69**
Cup Brushes, Brass Coated Steel Wire	60
Cup Brushes, Crimped Wire	60
Cup Brushes, knotted	56–59
Cup Brushes, Silicon Carbide Bristles	60
Cup Brushes, Straight Filament	61
Cup Brushes with Shank	78–79
Cutback Brushes	24–25
Cut Cases	134–135
Cylinder Brushes	114–115
Deburring Brushes	**45–53**
Deburring End Brushes	52–53
Deburring Wheel Brushes	46–49
Disc Brushes	149–151
D.I.Y. Brushes and Sales Promotion	**131–139**
Drive Arbors	42–43
Dusters	104–105
End Brushes with Shank	80–83
File Cards	101
File Cleaners	101
Fine Scratch Brushes	95
Fitting Brushes	128
Hand Brushes and Brooms	**89–107**
Hand Brushes Export Model	93
Hand Brushes Heavy Duty	93
Hand Brushes Rectangular and Violin	99
Hand Brushes Special Models	98–101
Hand Brushes Standard	91
Hand Brushes with Bracket	99
Hand Brushes with Plastic Handles	92
Hand Brushes with Scraper	93
Hand Brushes with Strap	99
Hand Brushes with Two-Components Handles	92
Handles and Extensions	127
Hanger assembly for tube brushes	137
High Performance Filament Brushes HFB	144–147
Hole Cleaning Brushes	116
Industrial Brushes	**141–155**
Interior Brushes	**109–129**
Joint Cleaning Brushes	19
Knotted End Brushes with Shank	84–85
Knot Wheel Brushes	16–18
Lath Brushes	152–153
Low sparking brushes	68–69
Metal Discs as spare parts	42–43
Microabrasive Interior Brushes	110–112
Micro Interior Brushes	113
Miniature Brushes	86–87
Packing and Sales Promotion	136–139
Pipeline Brushes	20–23
Plasterer's Brushes	101
Radiator Brushes	100
Rivet Brushes	93
Roller Brushes	50–51
Roughering Brushes	101
Rust Scratcher	129
Satinising Brushes	34–35
Scratchers	129
Scrubs	102–103
Sealing brushes angled	162–163
Sealing brushes straight	160–161
Shank Brushes	**71–87**
Shaped strip brushes	168–169
Single Segment Brushes	26–29
Sleeve Brushes	118–121
Small diameter crimped wheels SDW	40–41
Soldering Fluid Brushes	129
Soldering tip brush	94
Soluble Oil Brushes	129
Spark Plug Brushes	94
Spiked Rollers	101
Staining Brushes	100
Staple Set Brushes	148
Stove Pipe Brushes	126
Stringer Bead Brushes	20–23
Strip Brushes	**158–172**
Strip brushes, Cup shaped	170
Strip brushes for slots / profiles	164–165
Strip brushes in aluminum profile	166–167
Stripping brushes	36–37
Structuring Brushes with Shank	76, 35
Tube Brushes	118–121
Universal Wire Brushes	93
Wax Polishing Brush	100
Weed Brooms	106–107
Weed Brushes	106–107
Wheel Brushes	**15–43**
Wheel Brushes for the treatment of hard metal	40–41
Wheel Brushes with Shank	72–75
Wheel Brushes with thread	62–63
Wide Face Brushes	154–155
X-LOCK brush assortment	66–67

In the course of further technical developments, the right is reserved to change the construction and appearance of the brushes without prior notice. Indications of size are approximate and without obligation or recourse to third parties.

Bold printed item numbers are always on stock. *Italic printed articles* as well as special brushes will be produced for you with a short delivery time.
Please also see our terms on page 178.

EAN

All packaging units are marked with an EAN Code.
This symbol in the catalogue shows you which articles are individually marked with an EAN Code.

Our "get to know"-box

With this box you get a selection of our most popular and proven tools at an unbeatable price. Test the quality of our "Made In Germany" brushes in the most diverse applications!

CONTENT:	499.900	499.901
+ 1x Knotted bevel brush DIA 2 1/2", thread M 14	482.217 STH 0,020"	482.817 ROH 0,020"
+ 1x Knotted wheel brush DIA 4 1/2", bore 7/8"	472.211 STH 0,020"	472.811 ROH 0,020"
+ 1x Cup brush crimped DIA 2 1/2", Thread M 14	421.167 STA 0,014"	421.367 ROH 0,014"
+ 1x Knotted wheel brush with shank DIA 3"	417.198 STH 0,020"	–
+ 1x Abrasive wheel brush with shank DIA 2"	–	415.842 SIC 120/0,043"
+ 1x Wheel brush crimped with shank DIA 2 3/8"	417.162 STA 0,012"	417.362 ROF 0,012"
+ 1x End brush crimped with shank DIA 7/8", long 2 5/8"	453.161 STA 0,012"	453.361 ROF 0,012"
+ 1x Cylindrical brush 12 x 4", DIA 3/8"	542.303 STA 0,006"	542.503 ROF 0,006"
+ 1x Cylindrical brush 12 x 4", DIA 3/4"	542.311 STA 0,006"	542.511 ROF 0,006"
+ 1x Professional hand brush 9 x 3/4", 2 rows	182.401 STA 0,014"	182.421 ROF 0,014"
+ 1x Hand brush straight, 4 rows	100.041 STA 0,014"	104.641 ROF 0,014"
+ 1x Spark plug brush, 6", 3 rows	125.211 MES 0,006"	125.231 ROF 0,006"

More information

... found on our homepage!

www.lessmann.com

Beside the variety of languages (German, English, French, Spanish, Czech, Italian and Russian) we also provide you with useful information.

For example you can download:
- the complete article-number-catalogue-side-index
- enquiry forms of the different special brushes
- notes regarding the filling materials
  e.g. tables of the chemical and physical characteristics
- our brochure "Brush-Know-How"
- safety and operating instructions
- ISO 9001 certificate
- general terms and conditions

... or in our special leaflets:
- Deburring with Brushes, Art. No. 99EGBENG
- Interior Brushes / Miniature Brushes, Art. No. 99INBENG
- Disc Brushes, Art. No. 99TBDEUENG
- Brush Know How, Technical Advice, Art. No. 99BKHENG
- Strip Brush Catalogue
- Brushes for Pipeline processing

LESSMANN®
THE GERMAN BRUSH COMPANY

MORE THAN 10.000 SOLUTIONS...

Due to our own engineering, tool and equipment design and our modern, also flexible, production facilities, we are able to produce special brushes in small and large batches.

ALL-CERT
DIN EN ISO 9001
DIN EN ISO 14001

CERTIFIED ACCORDING TO
DIN EN ISO 9001:2015
DIN EN ISO 14001:2015

Lessmann GmbH
Lucas-Schultes-Str. 2
86732 Oettingen
Germany

Tel.: +49 9082 707-0
www.lessmann.com
info@lessmann.com

Subject to technical changes and errors
01/2023 ArtNr 99KATENG23

QUALITY MADE IN GERMANY